Electric TV Lifting System

User Guide

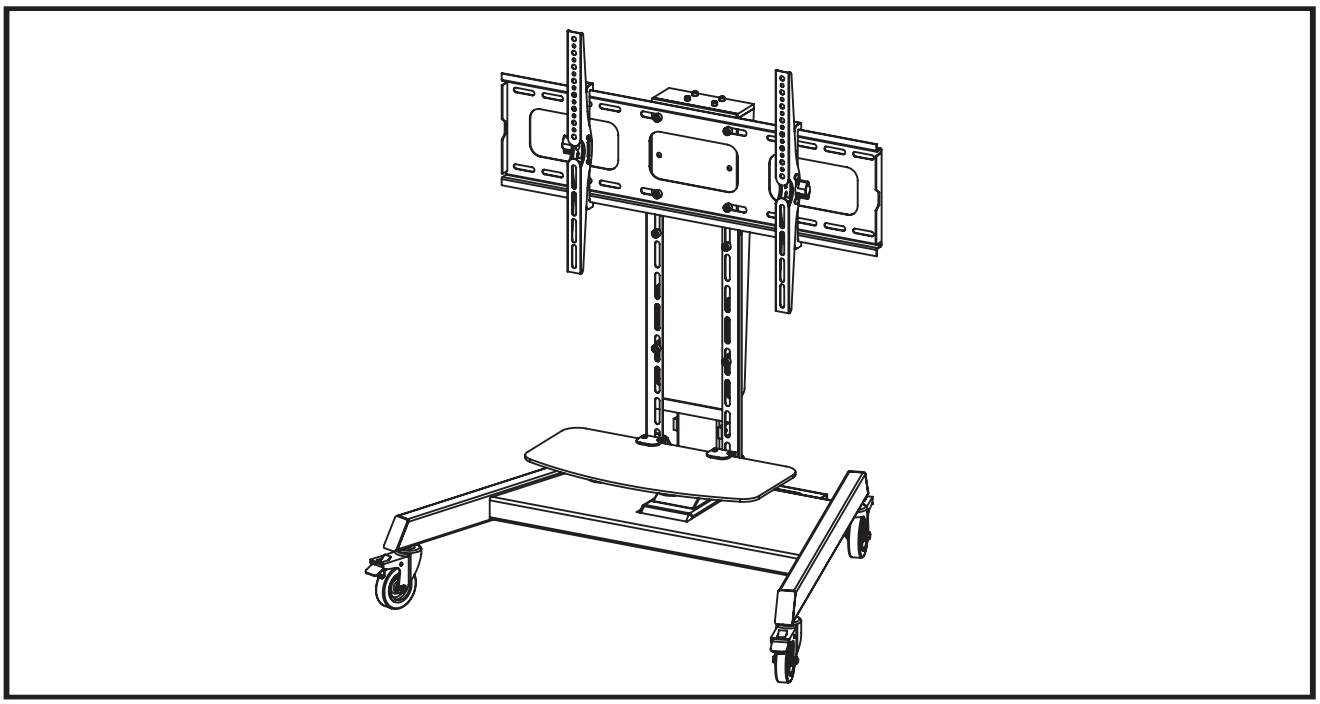

CAUTION

MAKE SURE NO OBSTACLES ARE IN THE LIFTING'S PATH AND ALL CORDS ARE OF APPROPRIATE LENGTH FOR LIFTING TRAVEL. FAILURE TO COMPLY WITH OR OBSERVE ALL ASSEMBLY, SAFETY, AND OPERATION INSTRUCTIONS AND WARNINGS REGARDING THE USE OF THIS PRODUCT MAY RESULT IN SERIOUS PROPERTY DAMAGE OR BODILY INJURY.

TABLE OF CONTENTS **PAGE**

1. SAFETY AND WARNINGS 2
2. USAGE 2
3. SETUP AND INSTALLATION 2
4. PARTS LIST 3
5. ASSEMBLY INSTRUCTIONS 4
6. TECHNICAL SPECIFICATIONS 6
7. TROUBLESHOOTING GUIDE 6

1. SAFETY AND WARNINGS

- Inappropriate use of this product may cause property or bodily injury.
- Check surroundings on all sides before using the desk. Body parts and property can be crushed if trapped between an immobile obstacle and the desk's range of motion.
- Ensure the length of power cords are accounted for when operating the TV lift. Monitors, computers, speakers, anything with a cord that is not long enough for the desk's range of motion could be pulled down or have its wires broken. Items pulled off the desk may cause other items to fall.
- Please provide this operation to any users, installers, or support personnel operating the product.

2. USAGE

This TV lift has electric motors and is designed for use in dry work areas only.
The desk height is adjustable so that it can be positioned at the most ergonomically suitable height. These desks are designed only for the purposes included in this manual. They should not be used in environments with high humidity or dampness. Any other use is at user's risk.

Children should never use the TV lift unless they are supervised by adults.

Liability: Under no circumstances does the manufacturer accept warranty claims or liability claims for damages caused from improper use or handling of the TV lift other than that which is described in this operation manual.

3. SETUP AND INSTALLATION

Once the TV lift has been assembled, adjust the feet so that the desk is level and does not shift its position. After this, connect the desk to the 110v or 220v outlet and the desk is ready for use.

Check that no cables can get jammed.

Choose a placement for the desk that's a safe distance from window frames, radiators, furniture etc. so that people do not get stuck or trapped by the desk.

4. PARTS LIST

Tools Required

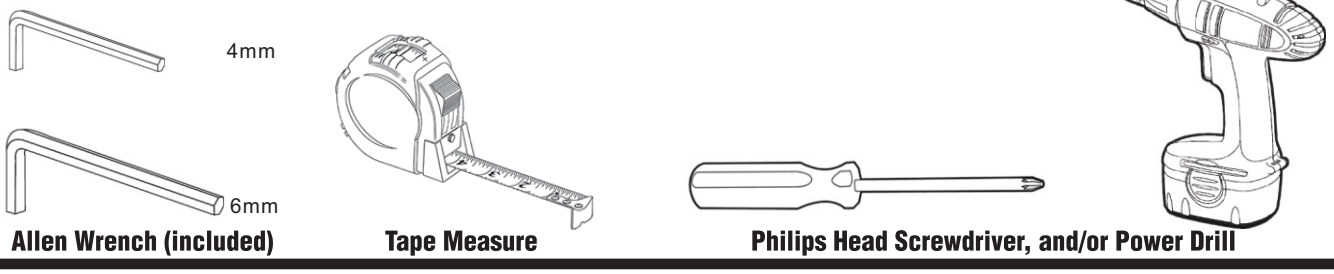

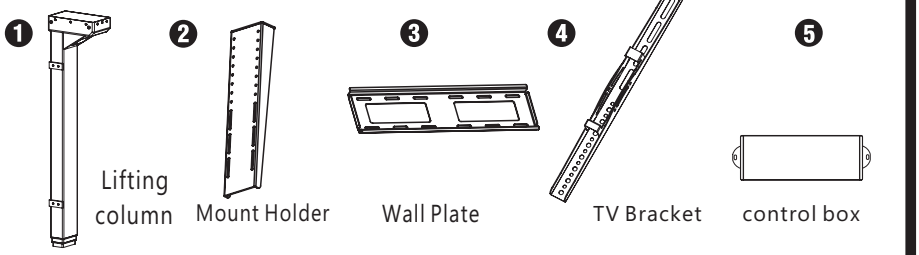

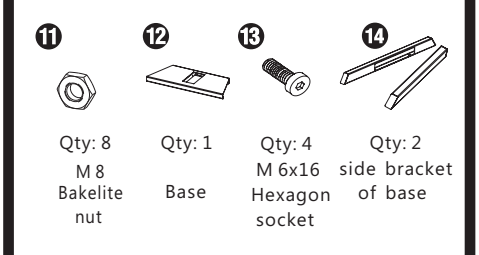

Please count all pieces before disposing of any carton or packing material. Use a padded or carpeted area for assembly to avoid damage. For ease and safety, we recommend two people for assembly.

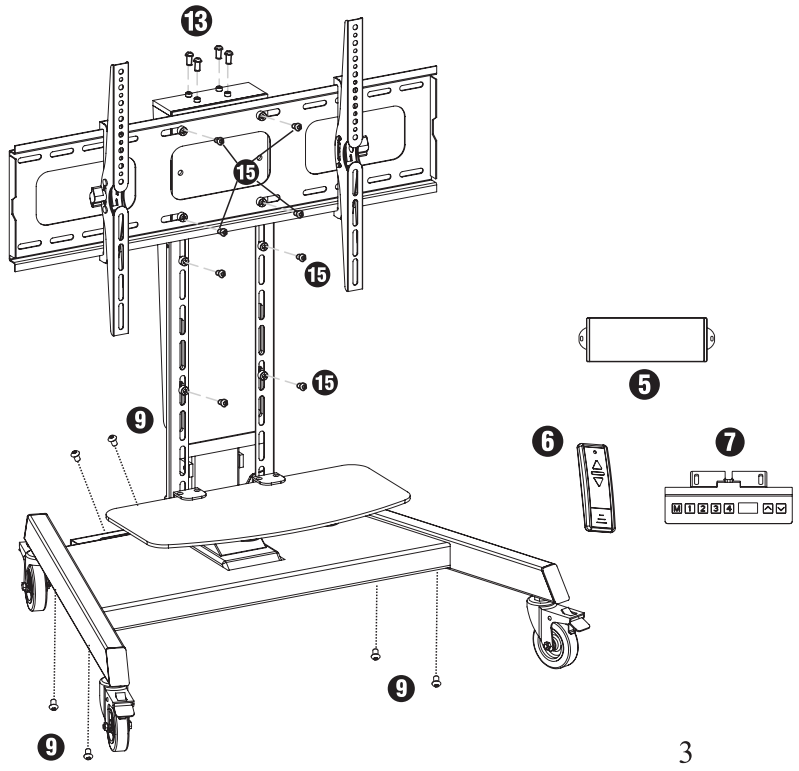

Part #	Description	Qty
1	Lifting Column	1
2	Mount Holder	1
3	Wall Plate	1
4	TV Bracket	2
5	Control box	1
6	Remote	1
7	Handset	1
8	Wires	2
9	M6X12 machine screw	12
10	Wire tray	1
11	Bakelite nut	8
12	Base	1
13	M6x16 Hexagonsocket	4
14	Side bracket of base	1
15	M8x20 Hexagon socket	8
16	Wheels	4
17	shelf	1

5. ASSEMBLY INSTRUCTIONS

A.Fix the side bracket (Part#14) to the base (Part#12) by screws (Part#9)

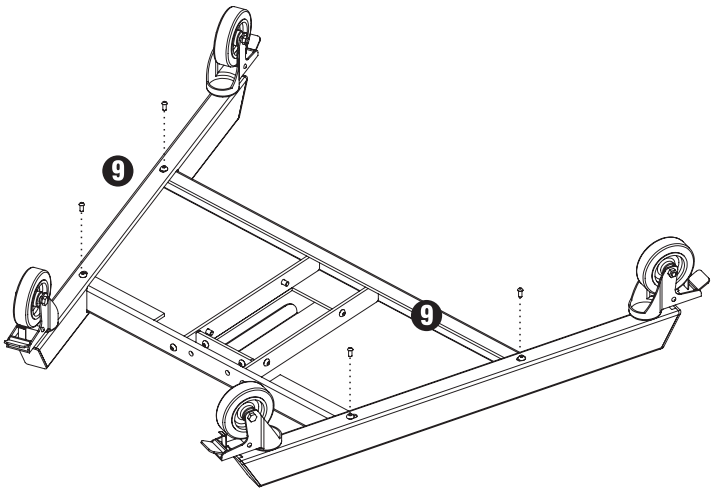

B. Fix the Lifting Column (Part#1) to the base (Part#12) by screws (Part#9) , make sure all holes of the lifting column will match base , then tighten the screws.

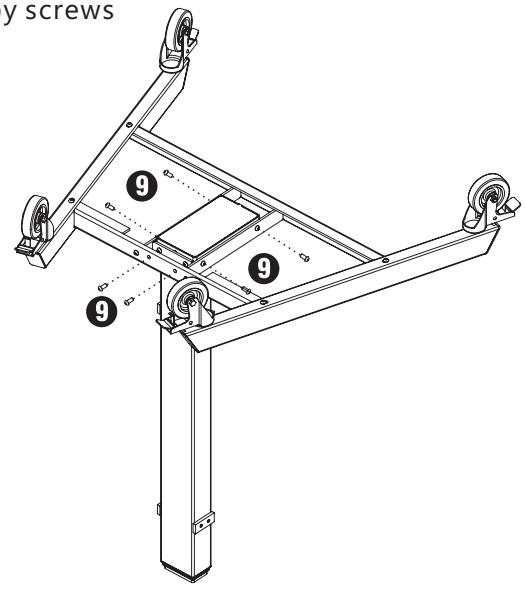

C. Install the wire tray (Part#10) to the base (Part#12) by screws (Part#9) .

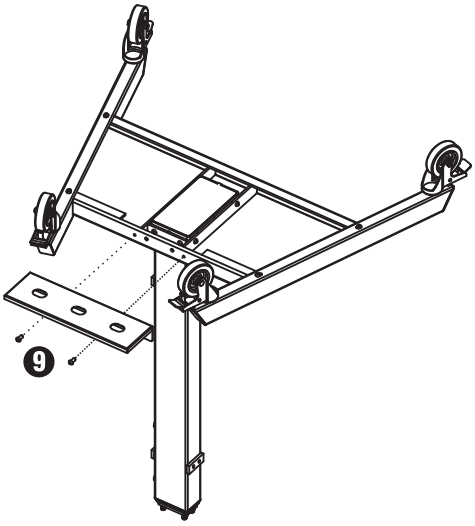

D. Install the wall plate (Part#3) to the mount holder (Part#10) by screws (Part#15) .

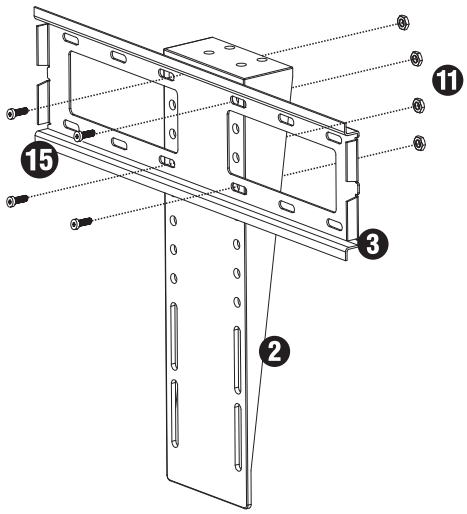

E. Connect the wall mount on the top of column, and then tighten the screws (Part#15) .

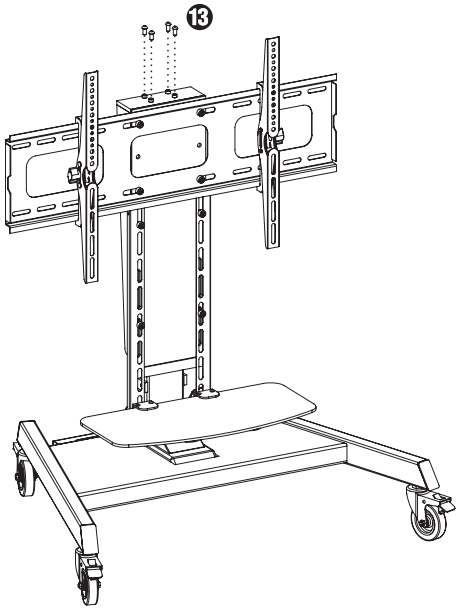

F. FIX the hold of the shelf (Part#17) to the mount holder (Part#10) by screws (Part#15) .

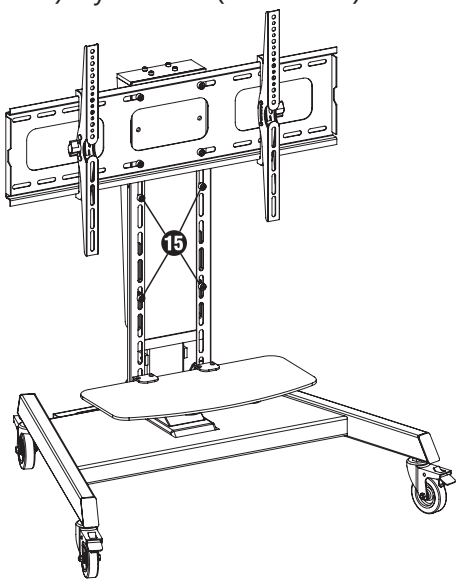

G. Mounting monitor brackets to a TV with a flat back.

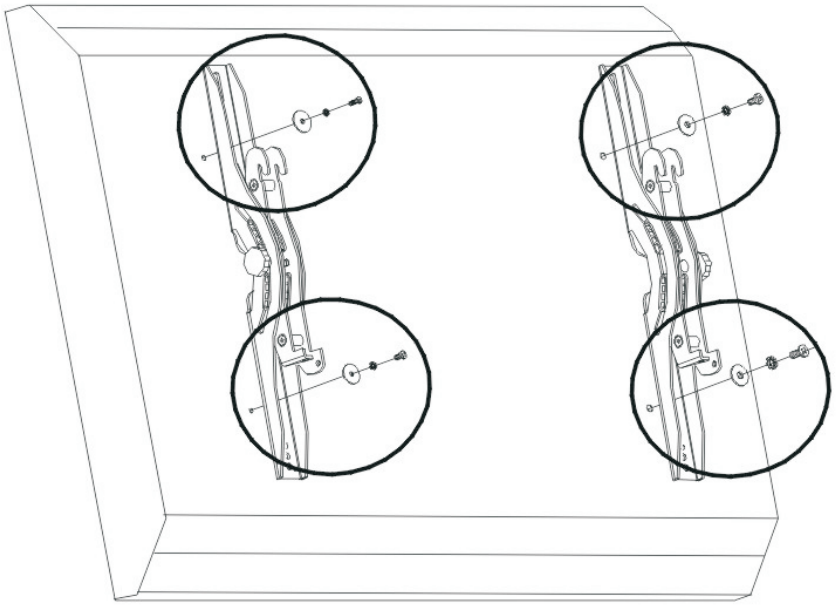

Attachting monitor to wall plate of the column and add safety bolts.

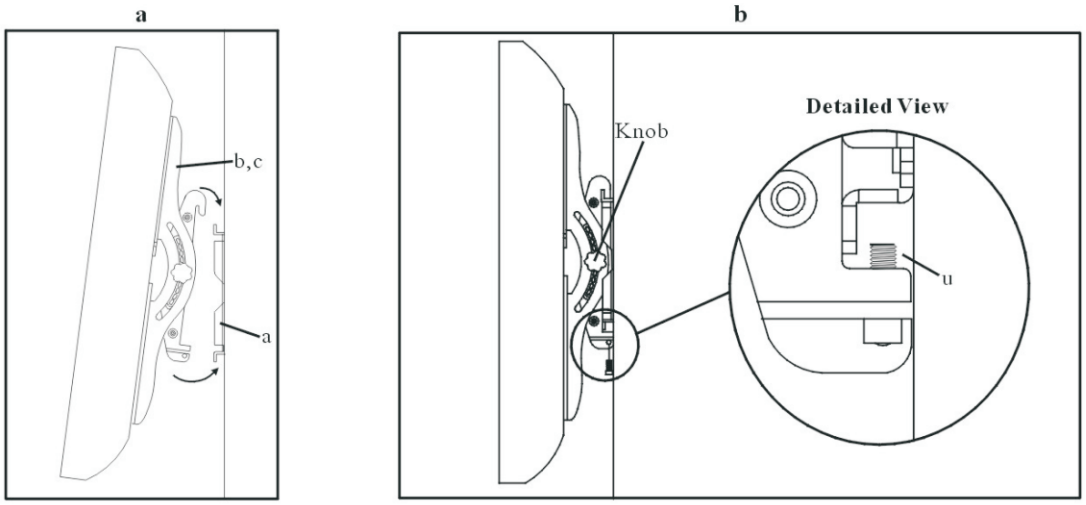

F. Please connect the wires as per the diagram below.

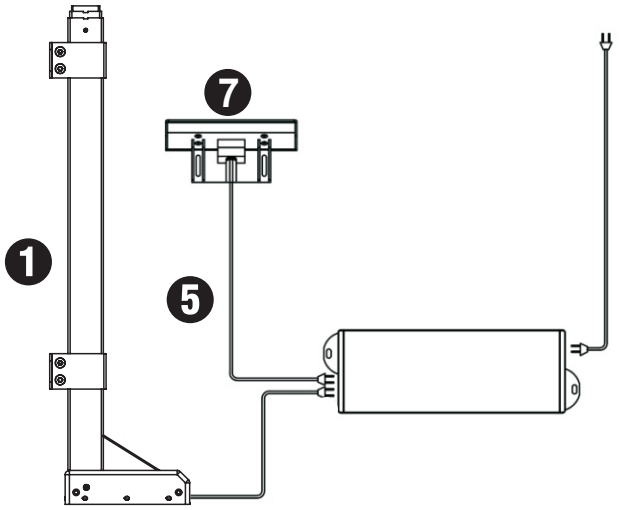

G. Plug the Power Cord into a 110v or 220v outlet

IMPORTANT!

You must RESET the desk prior to use:

Press and hold the DOWN button on the Handset (Part #7) until the columnreaches its lowest height. Release the DOWN button. Press and hold the DOWN button again for about 10 seconds until the column lowers a little bit more, slightly rises and stops. Release the DOWN button.

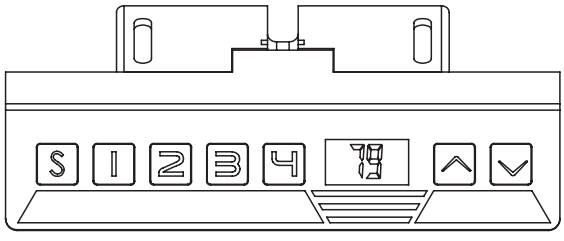

7

Your TV lift is now ready to use.

To program up to four presets:

Use the up/down buttons to find a desired height, then press "S" followed by a number 1 – 4.

H. About the remote control:

Besides the handset, we also provide the remote control, It has been set up before delivery and can be used normally.Once you need to change the remote control, it need to be study:

-Press "UP" "HOME" and "DOWN", when you hear the "bee", and then STUDY succeed.

Then initialize it:

-Press "down" button, and the release it

-And then press the "down" button for 10 seconds, when you hear the "bee", then initialize succeed.

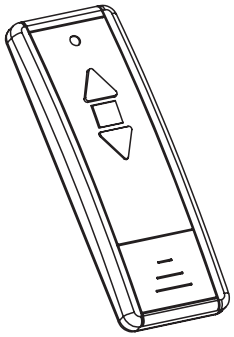

6. TECHNICAL SPECIFICATIONS

Travel Speed	30mm (1.2") per second
Weight Capacity	70kg(154lbs).
Duty Cycle	Max 5 mins on.15 min off.
	4 Memory presets Soft Start/Stop Remote

7. TROUBLESHOOTING

--Reset Instructions--

If experiencing error messages showing on the Handset or no response when trying to raise or lower:

Unplug the power cable and plug cord back in, Reset by holding“down”button for 5seconds. The desk will reach its lowest height and slightly rises and stops.
(buzzer will remind by”bee” which means “reset” have finished)

If the TV Lift crashed into something or there is a sudden force on it, our anti-collision feature will detect andmove the desk into opposite direction and stop.If the handset display“E8”,it is desk inclination remind and this code will disappear after 15seconds automatically.

If the handset displays E11 or E21 , confirm that all wired connections are secure (legs to cables, cables to control box). Then perform the reset procedure above. If the error message persists after the reset procedure or if the height between the legs exceeds 5cm (2 inches) stop the reset procedure and contact us or local distributors.

If the handset displays "HOT", let the base rest and cool down for 20minutes.

If the TV Lift seems to be uneven,try the reset instructions above.If that does not work you may need to adjust the levelers at the bottom of the foot.

In the event of a power outage or if the power cord is unplugged, a manual reset may be necessary (see Reset Instructions above)



This product is designed with a duty cycle of Max 5 mins on.15 min off.

Keep Children away from electric height-adjustable desks, control units and handsets. There is a risk of injury and electric shock

Do not open any of the components: lifting columns, control box, or handset. There is a danger of electric shock

Keep all electrical components away from liquids