NATE

LTE'S GET ACTIVE

NT33-JR3-KJA84

Product Specification

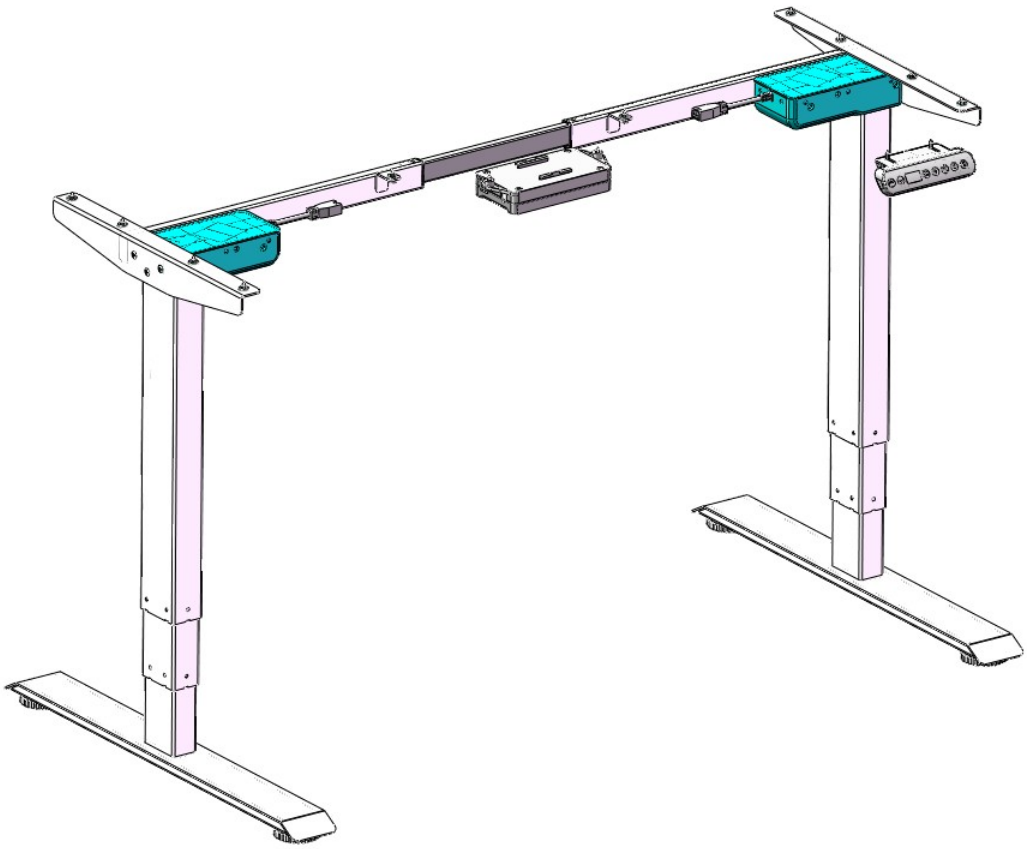

www.natekj.com

NATE DRIVE

Product Specification

NT33-JR3-KJA84

Product Characteristics

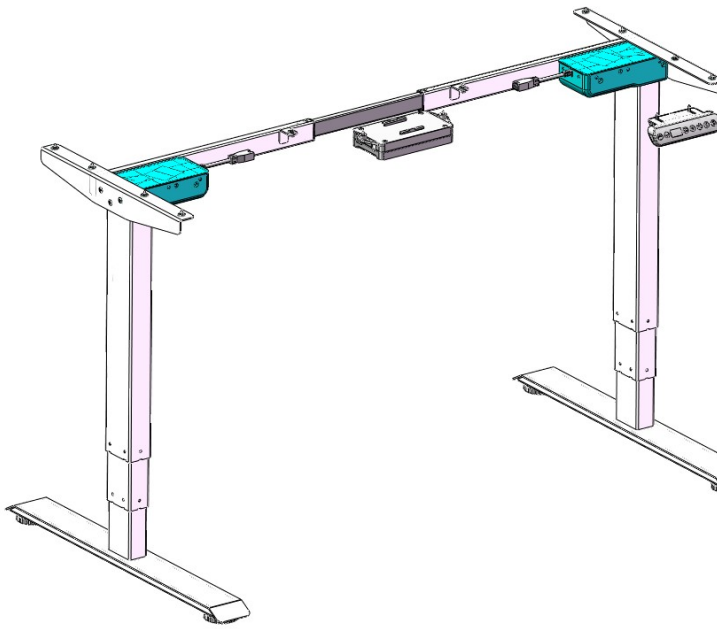

- **Height Range ： 600-1250mm**
- **Length range ： 1010-1750mm**
- **Size of desktop fits ： 1200-1800mm**
- **Foot length ： 600-700mm**
- **No hole design ，**
- **Load Capacity ： 120kg**
- **Maximum speed ： 30mm/s**
- **Low Noise Level ：≤ 50dB**
- **Anti-collision**
- **Standby ： < 0.1W**
- **Color ： White （ RAL9016 ） Black （ RAL9005 ） Grey （ RAL7045 ）**
- **Package Size ： 1065x270x215mm**
- **Gross Weight ： 27kg**

Available options

- **Support customize colors**
- **Match with any hand controller**
- **Available with many type of feet**

Usage

- **Work schedule: 10%, 2 minutes of work and 18 minutes of rest**
- **Usage environment: Indoor**
- **Storage and Transportation Temperature:-10℃ ~ 70℃**

Dimension drawing

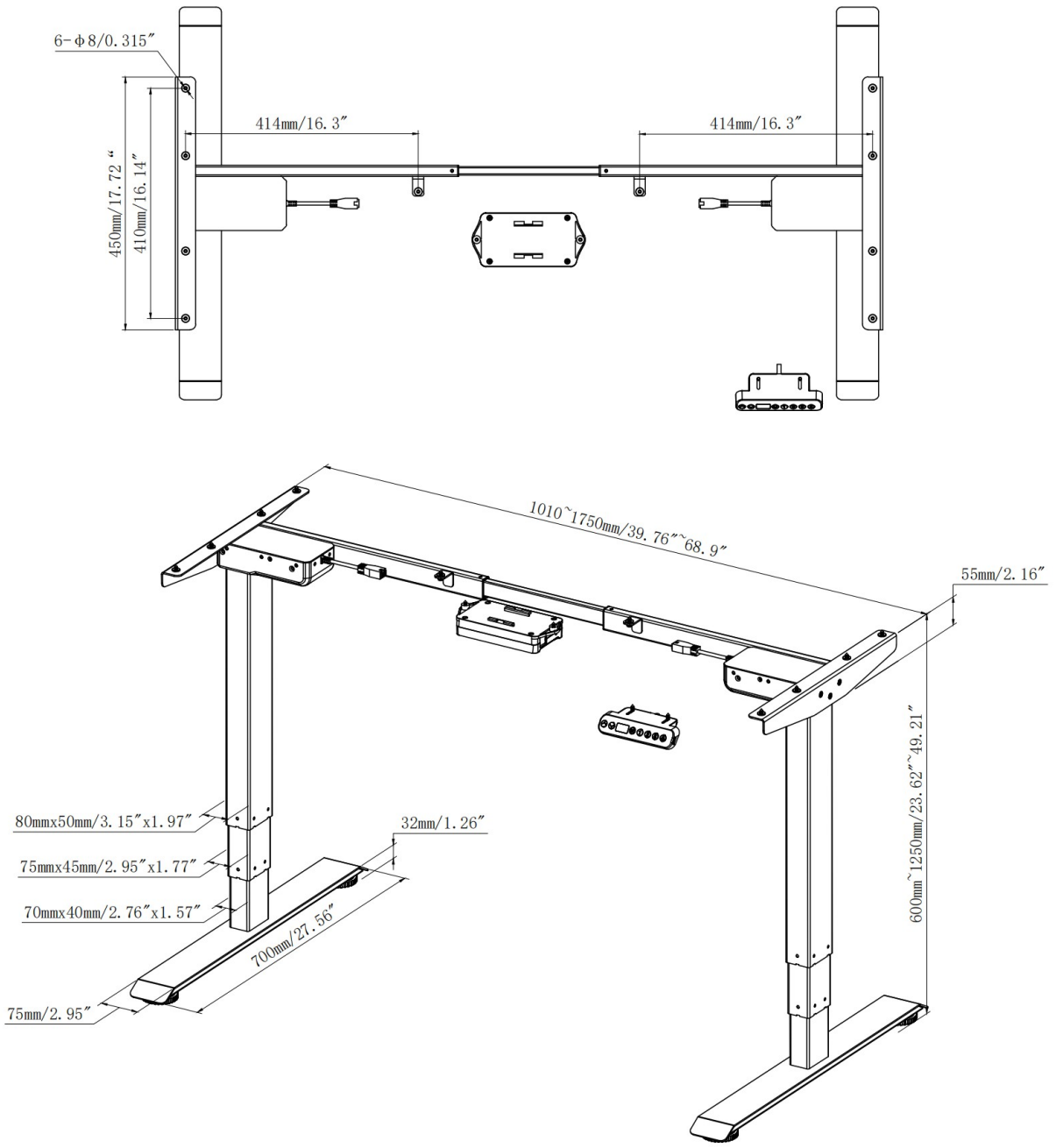

Example of naming convention

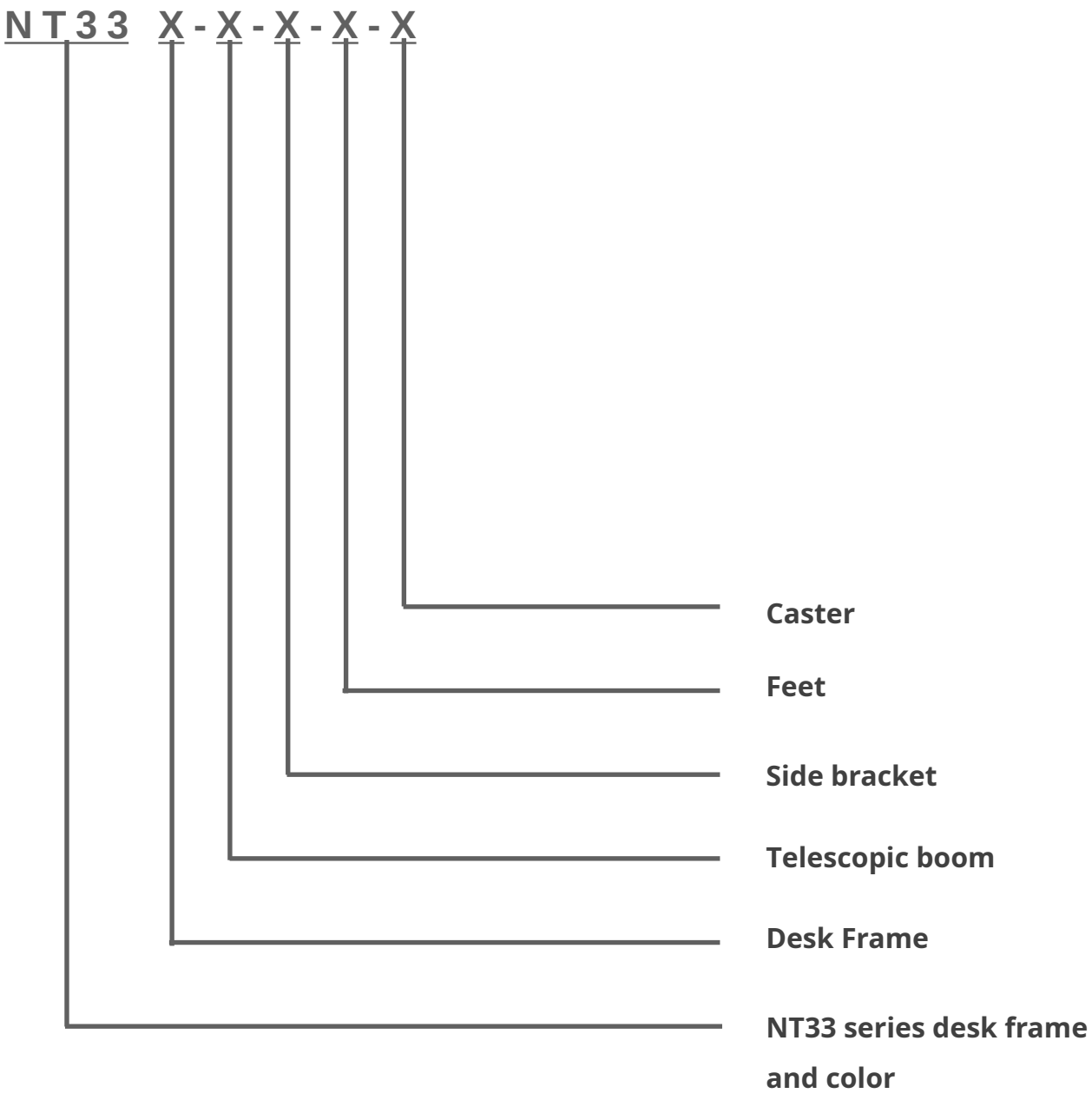

F represents no holes / A represents upwards / R represents reverse