Electric Height Adjustable Desk 1-Leg

User Guide

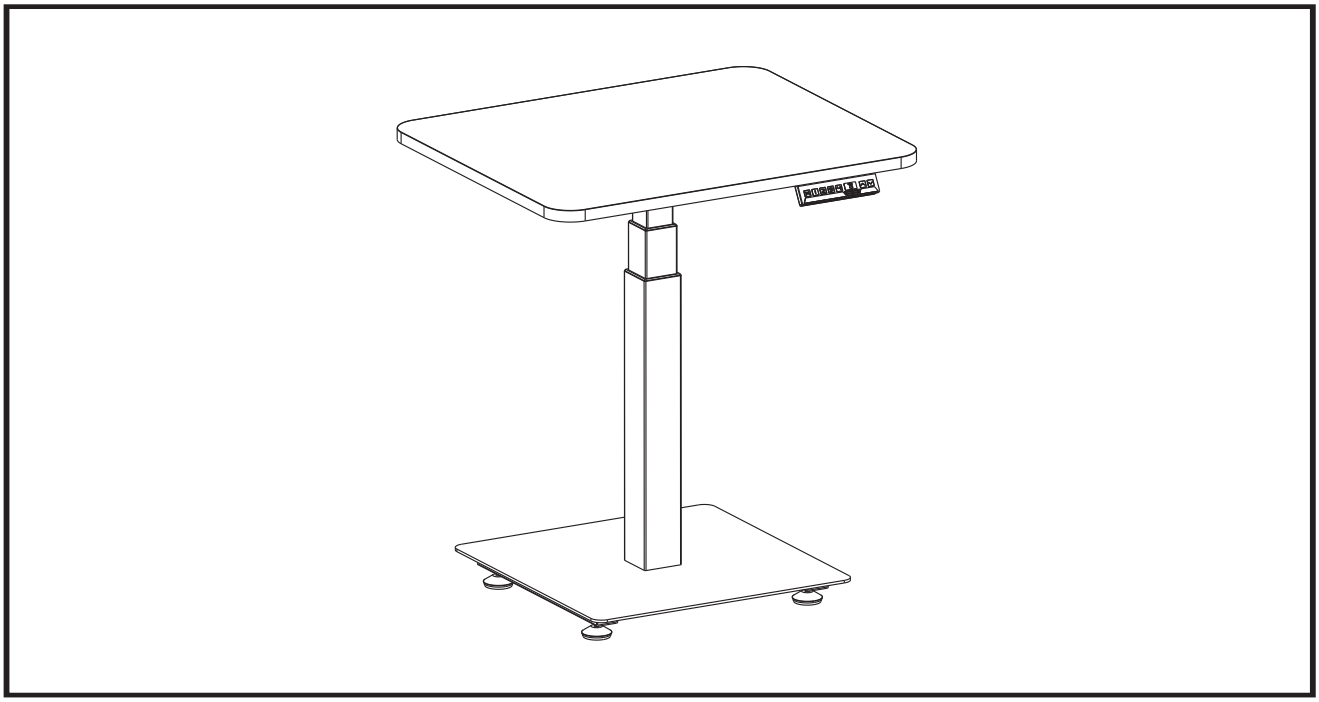

CAUTION

MAKE SURE NO OBSTACLES ARE IN THE DESK'S PATH AND ALL CORDS ARE OF APPROPRIATE LENGTH FOR DESK TRAVEL. FAILURE TO COMPLY WITH OR OBSERVE ALL ASSEMBLY, SAFETY, AND OPERATION INSTRUCTIONS AND WARNINGS REGARDING THE USE OF THIS PRODUCT MAY RESULT IN SERIOUS PROPERTY DAMAGE OR BODILY INJURY.

IMPORTANT:

Any user or installer of desk base must study this manual carefully.

If this desk is sold, please provide the manual to the buyer.

TABLE OF CONTENTS **PAGE**

1. SAFETY AND WARNINGS 2
2. USAGE 2
3. SETUP AND INSTALLATION 2
4. PARTS LIST 3
5. ASSEMBLY INSTRUCTIONS 4
6. TECHNICAL SPECIFICATIONS 7
7. TROUBLESHOOTING GUIDE 7

1. SAFETY AND WARNINGS

- Inappropriate use of this product may cause property or bodily injury.
- Check surroundings on all sides before using the desk. Body parts and property can be crushed if trapped between an immobile obstacle and the desk's range of motion.
- Ensure the length of power cords are accounted for when operating the desk. Monitors, computers, speakers, anything with a cord that is not long enough for the desk's range of motion could be pulled down or have its wires broken. Items pulled off the desk may cause other items to fall.
- Please provide this operation to any users, installers, or support personnel operating the product.

2. USAGE

This height adjustable desk has electric motors and is designed for use in dry work areas only. The desk height is adjustable so that it can be positioned at the most ergonomically suitable height. These desks are designed only for the purposes included in this manual. They should not be used in environments with high humidity or dampness. Any other use is at user's risk.

Do not move around, crawl or lie under the desk frame. Do not sit or stand on the desk frame.

Children should never use the desk unless they are supervised by adults.

Liability: Under no circumstances does the manufacturer accept warranty claims or liability claims for damages caused from improper use or handling of the desk frame other than that which is described in this operation manual.

3. SETUP AND INSTALLATION

Once the desk has been assembled, adjust the feet so that the desk is level and does not shift its position. After this, connect the desk to the 110v or 220v outlet and the desk is ready for use.

Check that no cables can get jammed.

Choose a placement for the desk that's a safe distance from window frames, radiators, furniture etc. so that people do not get stuck or trapped by the desk.

Do not place any objects that are taller than 50cm(20") underneath the desk.
After it has been assembled, when moving the desk, DO NOT lift the desk by the desktop. Lifting this way can stress the fasteners connecting the desk base to the desktop. Lower the desk completely and lift the desk by grabbing the top of the desk base or by removing the desktop first.

4. PARTS LIST

Tools Required



Allen Wrench (included)

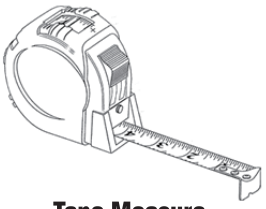

Tape Measure

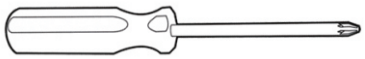

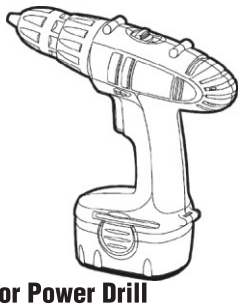

Philips Head Screwdriver, and/or Power Drill

Components

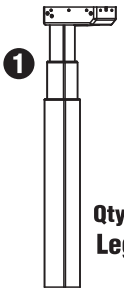

❶ Qty 1 Legs

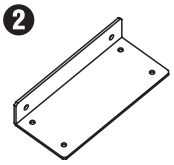

❷ Qty 2 Crossbar End

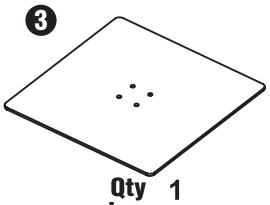

❸ Qty 1 base



❹ Qty 1 Control Box

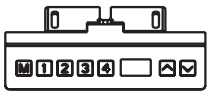

❺ Qty 1 Handset

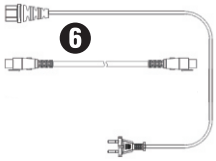

❻ Qty 2 Wires
Qty 1 power cord
Qty 1 connecting cables

Hardware

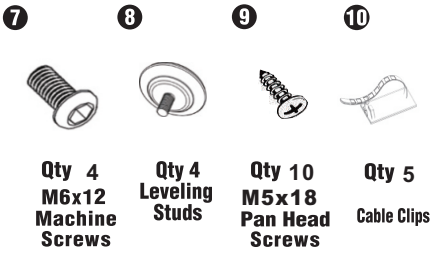

❼ Qty 4 M6x12 Machine Screws

❽ Qty 4 Leveling Studs

❾ Qty 10 M5x18 Pan Head Screws

❿ Qty 5 Cable Clips



⓫ Qty 8 Washers

⓬ Qty 2 M4x12 Pan Head Screws

⓭ Qty 4 M6x16 Machine Screws

Please count all pieces before disposing of any carton or packing material. Use a padded or carpeted area for assembly to avoid damage. For ease and safety, we recommend two people for assembly.

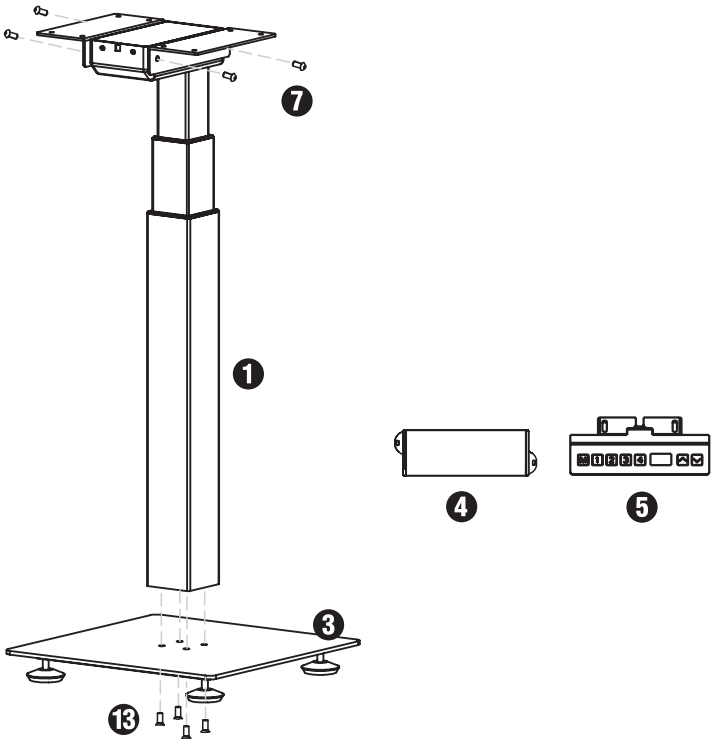

Part #	Description	Qty
❶	Leg	1
❷	Crossbar End	2
❸	base	1
❹	Control Box	1
❺	Handset	1
❻	Wires(Power&Connector wires)	2
❼	M6x12 Machine Screw	4
❽	Leveling Studs	4
❾	M5x18 Pan Head Screws	10
❿	Cable Clips	5
⓫	Washers	8
⓬	M4x12 Pan Head Screws	2
⓭	M6x16 Hexagon socket	4

5. ASSEMBLY INSTRUCTIONS

A. Use Machine Screws (Part #7) to hold Crossbar End (Part #2)to both sides of the top of Legs (Paart #1).

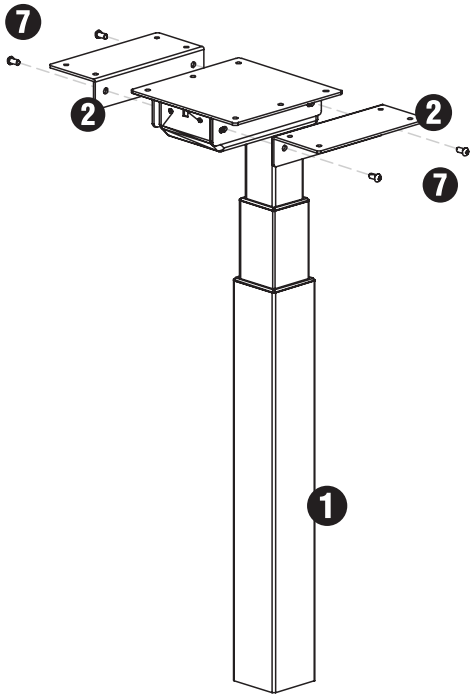

B. Use Flat Hexagon socket (Part #13) to hold base(Part #3) to the bottom of Leg (Part#1).

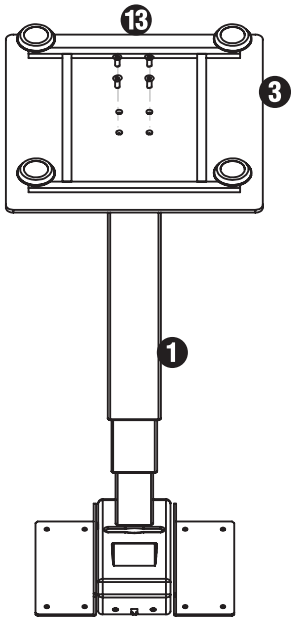

I. Double-check that the base is centered on the underside of the desktop and is located where you want it. Also, double-check that the included wood screws are not too long for your desktop and won't puncture the surface when screwed all the way in.

We recommend you pre-drill any holes needed for fasteners connecting the base to the top. ***NOTE:*** *PLEASE ENSURE THAT YOUR DESKTOP DOES NOT* ***ALREADY*** *HAVE HOLES BY CHECKING BOTH SIDES. This will make it easier to attach the screws and will greatly lessen the stress caused by driving a screw into the desktop material.*

Never use countersunk screws to fasten into the desktop. This will cause much greater stress on the desktop. Ensure any screw used will not puncture through the desktop surface or otherwise damage the material.

Now, proceed with securing the desk base to the desktop using qty 8 of the Pan Head Screws(part # 9)

Install as follows:
4 per Side Bracket (left)
4 per Side Bracket (right)

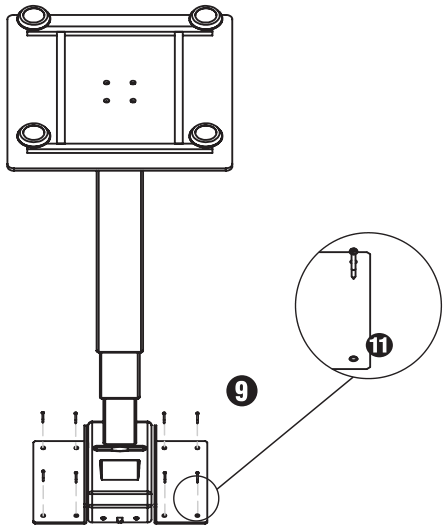

J. ***IN THIS FOLLOWING STEP, DO NOT OVERTIGHTEN SCREWS. OVER TIGHTENING COULD CAUSE THE PLASTIC ON THE COMPONENTS TO BREAK.***

We recommend you pre-drill any holes needed for fasteners connecting the Control Box to the top. This will make it easier to attach the screws and will greatly lessen the stress caused by driving a screw into the desktop material.

Never use countersunk screws to fasten into the desktop. This will cause much greater stress on the desktop. Ensure any screw used will not puncture through the desktop surface or otherwise damage the material.

Use qty 2 of the Pan Head Screws(Part # 9) to attach the Control Box (Part # 4). Ensure enough clearance at the wire ports for cable connections.

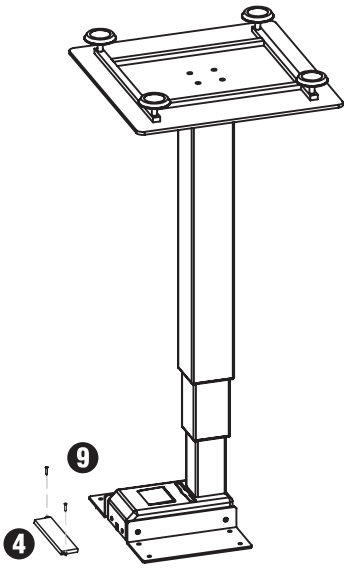

E. ***IN THIS FOLLOWING STEP, DO NOT OVERTIGHTEN SCREWS. OVER TIGHTENING COULD CAUSE THE PLASTIC ON THE COMPONENTS TO BREAK.***

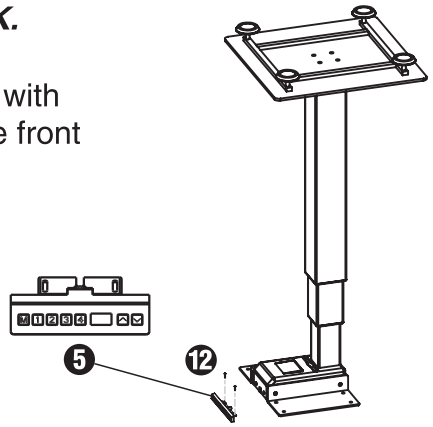

Place the Handset (Part #5) so the front of the Handset runs flush with the desktop edge. The Handset can be placed anywhere along the front edge of the desk, but we recommend placing it near the side so it doesn't interfere with your chair or legs when seated.

Use qty 2 of the Pan Head Screws (Part #12) to attach the Handset (Part # 5) to the desktop.

F. Connect the Wires as per the diagram below. Use the adhesive-backed Cable Clips (Part #10) to secure the Connecting Wires, so they don't sag.

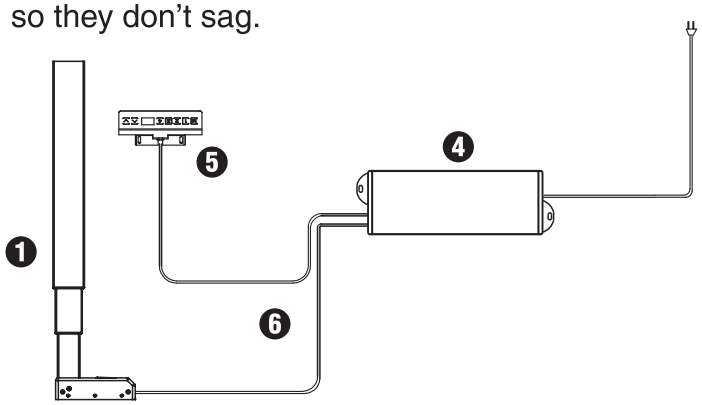

G. Turn the assembled desk right-side-up. With two people, grab the desk by the base (not the desktop) and turn the desk right-side up. Adjust the Leveling Studs on the Feet (Part #2) as needed.



MAKE SURE NO OBSTACLES ARE IN THE DESK'S PATH. MAKE SURE ALL CORDS ARE OF A LENGTH THAT WILL ACCOMMODATE THE CHANGE IN HEIGHT.

N. Plug the Power Cord into a 110v or 220v outlet.

IMPORTANT!

You must RESET the desk prior to use:

Press and hold the DOWN button on the Handset (Part #5) until the desk reaches its lowest height. Release the DOWN button. Press and hold the DOWN button again for about 10 seconds until the desk lowers a little bit more, slightly rises and stops. Release the DOWN button.

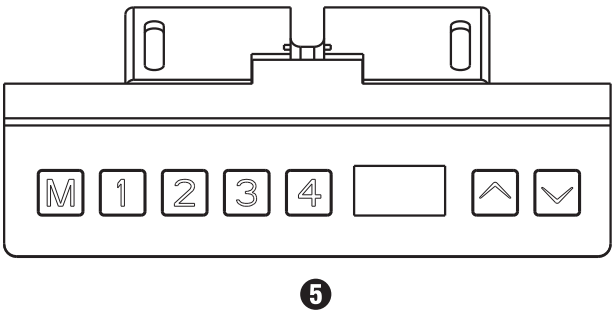

5

Your desk is now ready to use.

To program up to four presets:
Use the up/down buttons to find a desired height, then press "M" followed by a number 1 – 4.

6. TECHNICAL SPECIFICATIONS

Height Range	60cm(23.6") – 125cm (49.2")
Travel Speed	30mm (1.2") per second
Weight Capacity	80 kg (175 lbs).
Duty Cycle	10%, Max. 2 mins on, 18 mins off
	4 Memory presets Soft Start/Stop Adjustable leveling studs

7. TROUBLESHOOTING

--Reset Instructions--

If experiencing error messages showing on the Handset or no response when trying to raise or lower:

Unplug the power cable and plug cord back in, Reset by holding“down”button for 5seconds. The desk will reach its lowest height and slightly rises and stops.
(buzzer will remind by”bee” which means “reset” have finished)

If the desk crashed into something or there is a sudden force on it, our anti-collision feature will detect andmove the desk into opposite direction and stop.If the handset display“E8”,it is desk inclination remind and this code will disappear after 15seconds automatically.

If the handset displays E11 or E21 , confirm that all wired connections are secure (legs to cables, cables to control box). Then perform the reset procedure above. If the error message persists after the reset procedure or if the height between the legs exceeds 5cm (2 inches) stop the reset procedure and contact us or local distributors.

If the handset displays "HOT", let the base rest and cool down for 20minutes.

If the desk seems to be uneven, try the reset instructions above. If that does not work you may need to adjust the levelers at the bottom of the foot.

In the event of a power outage or if the power cord is unplugged, a manual reset may be necessary (see Reset Instructions above)



This product is designed with a duty cycle of 10%
(2 min. on, 18 min. off)

Keep Children away from electric height-adjustable desks, control units and handsets. There is a risk of injury and electric shock

Do not open any of the components: lifting columns, control box, or handset. There is a danger of electric shock

Keep all electrical components away from liquids