NATE

LTE'S GET ACTIVE

NT33

NT33-CZ

Product Specification



www.natekj.com

NATE DRIVE

Product Specification

NT33-CZ

Product Characteristics

- **Height Range ： 710-1150mm**
- **Length range ： 1100-1800mm**
- **Size of desktop fits ： 1200-1800mm**
- **No hole design ，**
- **Load Capacity ： 100kg**
- **Maximum speed ： 20mm/s**
- **Low Noise Level ：≤ 50dB**
- **Anti-collision**
- **Standby ： < 0.1W**
- **Color ： White （ RAL9016 ） Black （ RAL9005 ） Grey （ RAL7045 ）**
- **Package Size ： 975x950x210mm**
- **Gross Weight ： 43.5kg**



Available options

- **Support customize colors**
- **Match with any hand controller**
- **Available with many type of feet**

Usage

- **Work schedule: 10%, 2 minutes of work and 18 minutes of rest**
- **Usage environment: Indoor**
- **Storage and Transportation Temperature:-10℃ ~ 70℃**

Dimension drawing

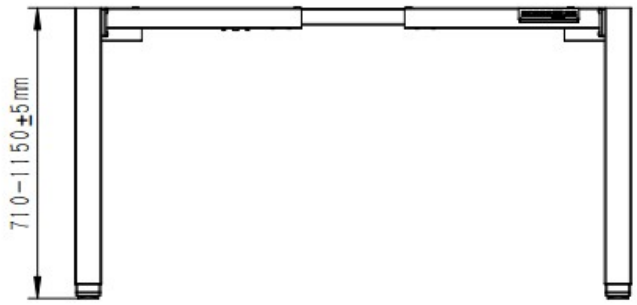

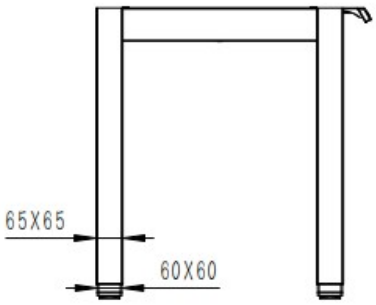

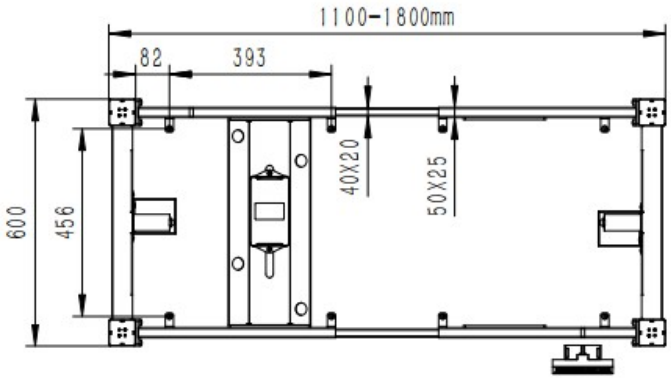

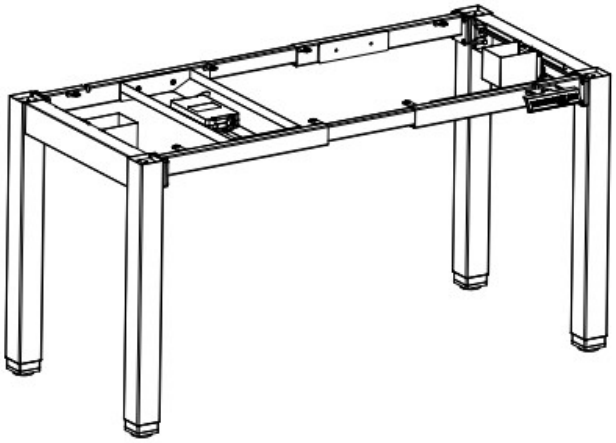

Example of naming convention

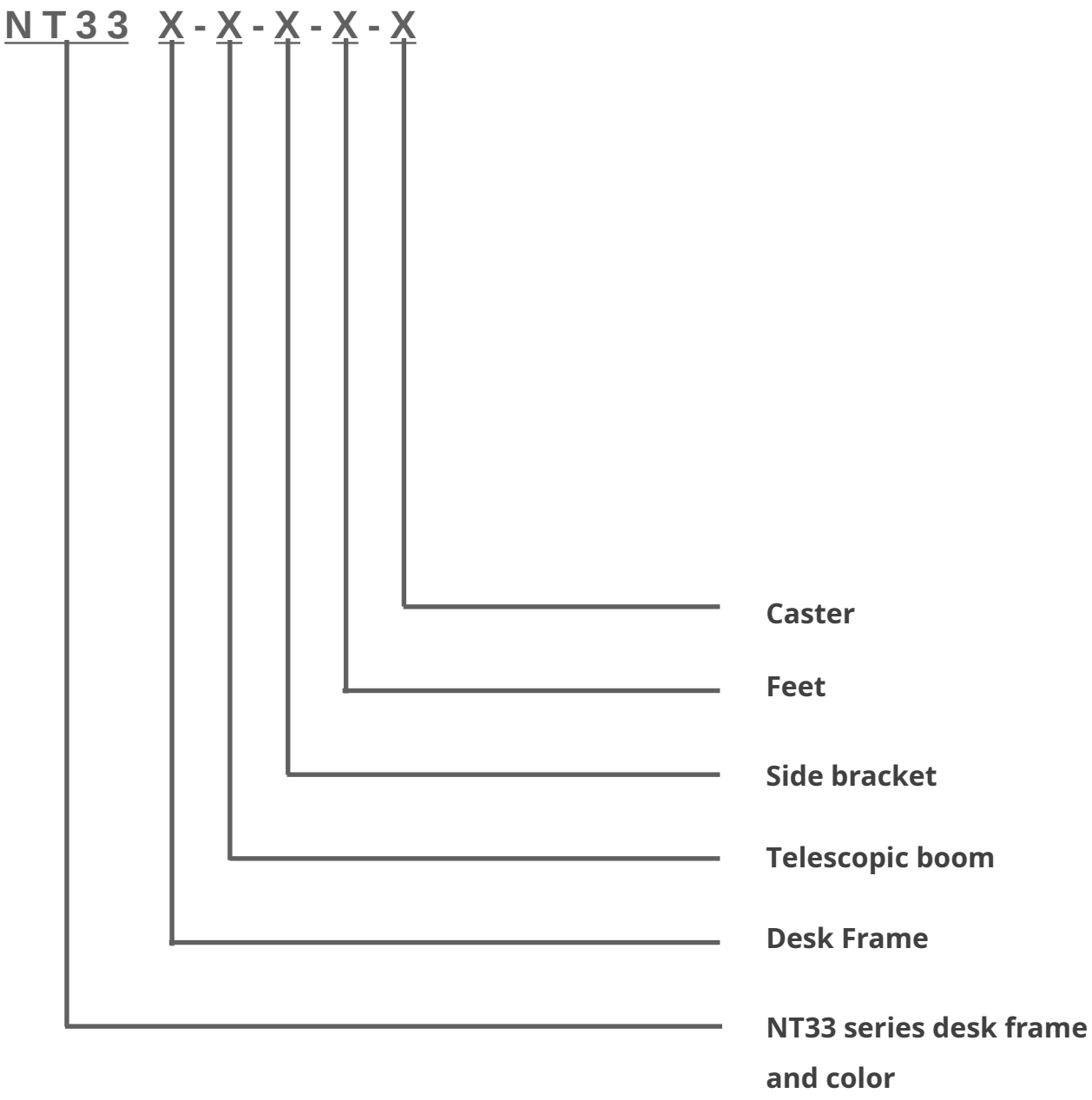

F represents no holes / A represents upwards / R represents reverse