NATE

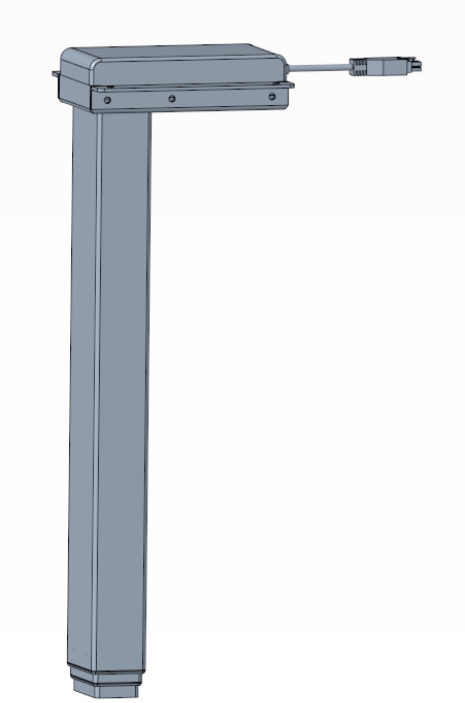

LIFTING COLUMN

JRF3-D5

Product Data Sheet

www.natekj.com

NATE DRIVE

NT33- JRF3-D5

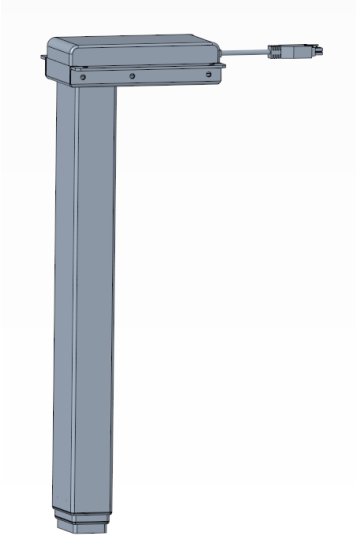

The JRF3-D5 is a three-section , rectangular tube lifter with no holes, featuring an outer tube size of 80 x 50 mm.

The support column is suitable for various desktop application needs; it is inverted .

The mounting hole positions of JRF3-D5 are the same as those of other rectangular tube lifting columns such as JRF2-D5 , therefore ...

Given the same desktop and feet, choose the appropriate option based on your actual needs.

The lift column. For solutions involving opposite tables, the lift column can be equipped with pads and connecting links.

Used in conjunction with the connecting rod.

The JRF3 -D5 rising bollard is available in three standard color schemes (black, gray, and white), but is also available in other colors.

Other colors can be selected as needed. The column has an obstacle detection and reversing function to maximize its stability.

This reduces the risk of the standing table encountering obstacles.

The JRF3 -D5 can be paired with a variety of NATE custom hand controllers, allowing customers to choose according to their specific needs.

Choose one with features such as USB charging, location memory, and child lock.

characteristic :

- Enhanced lifting column with optimized motor housing design, offering higher strength and stability.
- Maximum load : 800 N per lifting column
- Maximum speed: 30 mm/s (unloaded)
- Installation dimensions: 565 mm
- travel: 650 mm
- Weight: Approximately 7.5 kg per bollard
- Operating sound : < 50 dB
- Dimensions of the lifting bollard : 80 x 50 mm (External) , 75X45mm (Internal)

70 x 40 mm (internal)

- Motor housing dimensions: 183 x 147 x 49 mm
- Colors: Available colors: Black (RAL Eggshell Gloss 9005) , Silver Gray (Silver Gray EM Semi-gloss 2921), White (Semi-gloss 9016 Off-white)
- Quiet, calm

Options :

- Optional matching placemats

use:

- Two lifting columns driven synchronously ; one controller; one manual controller.
- Duty cycle: 10% ≈ 2 minutes of continuous full-load use , then pause.

  18 minutes
- Ambient temperature: 10 to 40 ° C
- Storage and transport temperature: -10 to +70 ° C
- For system compliance information, please refer to the "Conformity Declaration " in the User Manual.

With a fully retracted length of 565 mm and a travel length of 650 mm , the standard system offers a desktop height adjustment interval of 600 mm to 1250 mm , allowing the desk to be used for both seated and standing work.

JRF3-D5

Order instance：

NT33--X--X--X--X--X--X--X--X--X--X--X--X

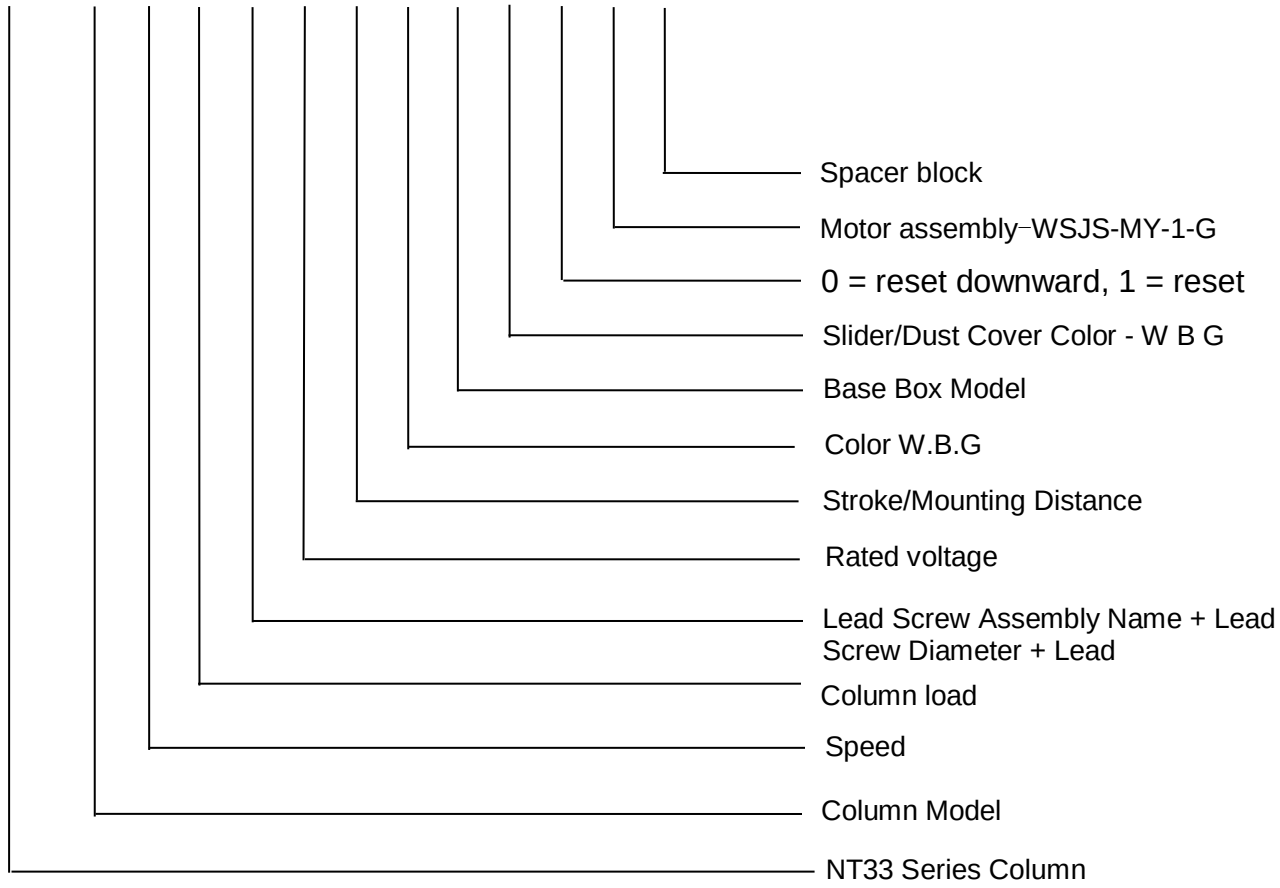

F indicates no hole, A indicates upright, and R indicates inverted.

Note that for a table, the padding blocks are used to connect the two uprights at positions A1 and A2. For a single table with added cross bracing, the padding blocks are used to connect the two uprights at position A3.

Dimensions

All measurements do not include the thickness of the powder coating.

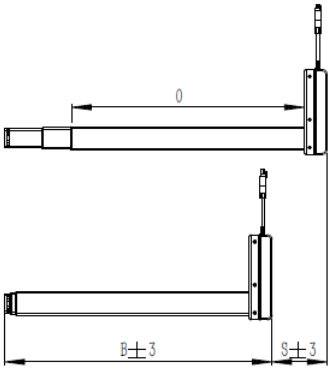

Version	Combination code	B (Installation Dimensions) [mm]	S (Itinerary) [mm]	O (outer tube length) [mm]
EU	JRF3-D5 xxxx 650/565	565	650	500

DL6J

RF3-D5 Installation Dimensions, Stroke, and Outer Tube Length (mm)

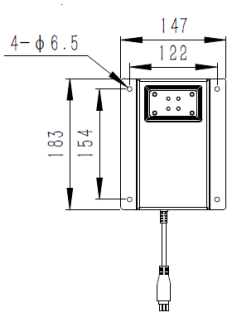

Motor housing
Outline dimensions

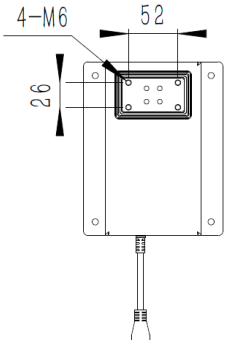

Lifting column base
mounting dimensions

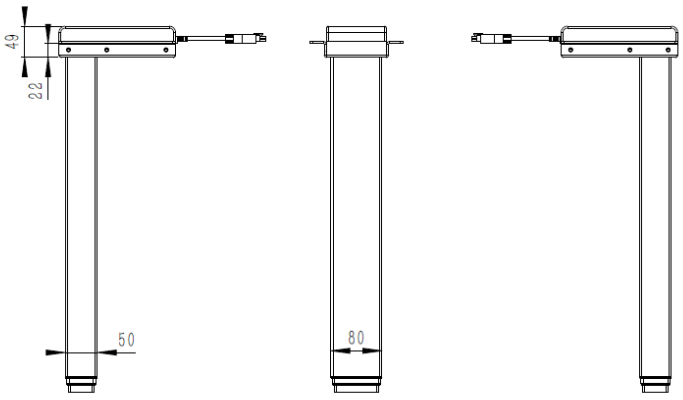

JRF3-D5 dimensions(mm)

For installation instructions and usage guidelines, please refer to the relevant user manual.