NATE



LIFTING COLUMN

DF3A

Product Data Sheet

www.natekj.com

NATE DRIVE

NT33- DF3A



The DF3A is a four- section, non-perforated lifting device with an outer tube size of φ70.
This upright column is suitable for various desktop application needs and is in a formal configuration.
The mounting holes for the DF3A are interchangeable with those for other round tube lifting columns such as the DF2A .
Given the same desktop and feet, choose the appropriate option based on your actual needs.
The lift column. For solutions involving opposite tables, the lift column can be equipped with pads and connecting links.
Used in conjunction with the connecting rod.

The DF3A rising bollard is available in three standard color schemes (black, gray, and white), but is also available in other colors.
Other colors can be selected as needed. The column has an obstacle detection and reversing function to maximize its stability.
This reduces the risk of the standing table encountering obstacles.

The DF3A can be paired with a variety of NATE custom hand controllers, allowing customers to choose the one that best suits their needs.
Choose one with features such as USB charging, location memory, and child lock.

characteristic :

- Enhanced lifting column with optimized motor housing design, offering higher strength and stability.
- Maximum load : 800 N per lifting column
- Maximum speed: 40 mm/s (unloaded)
- Installation dimensions: 600 mm
- travel: 650 mm
- Weight : Approximately 8.0 kg per lifting column
- Operating sound : < 50 dB
- Dimensions of the lifting column: φ70 mm (External), φ63.5mm (Middle) , φ57mm (internal)
- Motor housing dimensions: 195 x 96 x 50 mm
- Colors: Available colors: Black (RAL Eggshell Gloss 9005), Silver Gray (Silver Gray EM Semi-gloss 2921), White (RAL Semi-gloss 9016)
- Quiet, calm

Options :

- Optional matching table mats

use:

- Two lifting columns driven synchronously ; one controller; one manual controller.
- Duty cycle: 10% ≈ 2 minutes of continuous full-load use, then pause.
  18 minutes
- Ambient temperature: 10 to 40 °C
- Storage and transport temperature: -10 to +70°C
- For system compliance information, please refer to the "Conformity Declaration " in the User Manual.

With a fully retracted length of 600 mm and a travel length of 650 mm, the standard system offers a desktop height adjustment interval of 640 mm to 1290 mm, allowing the desk to be used for both seated and standing work.

www.natekj.com

DF3A

Ordering example:

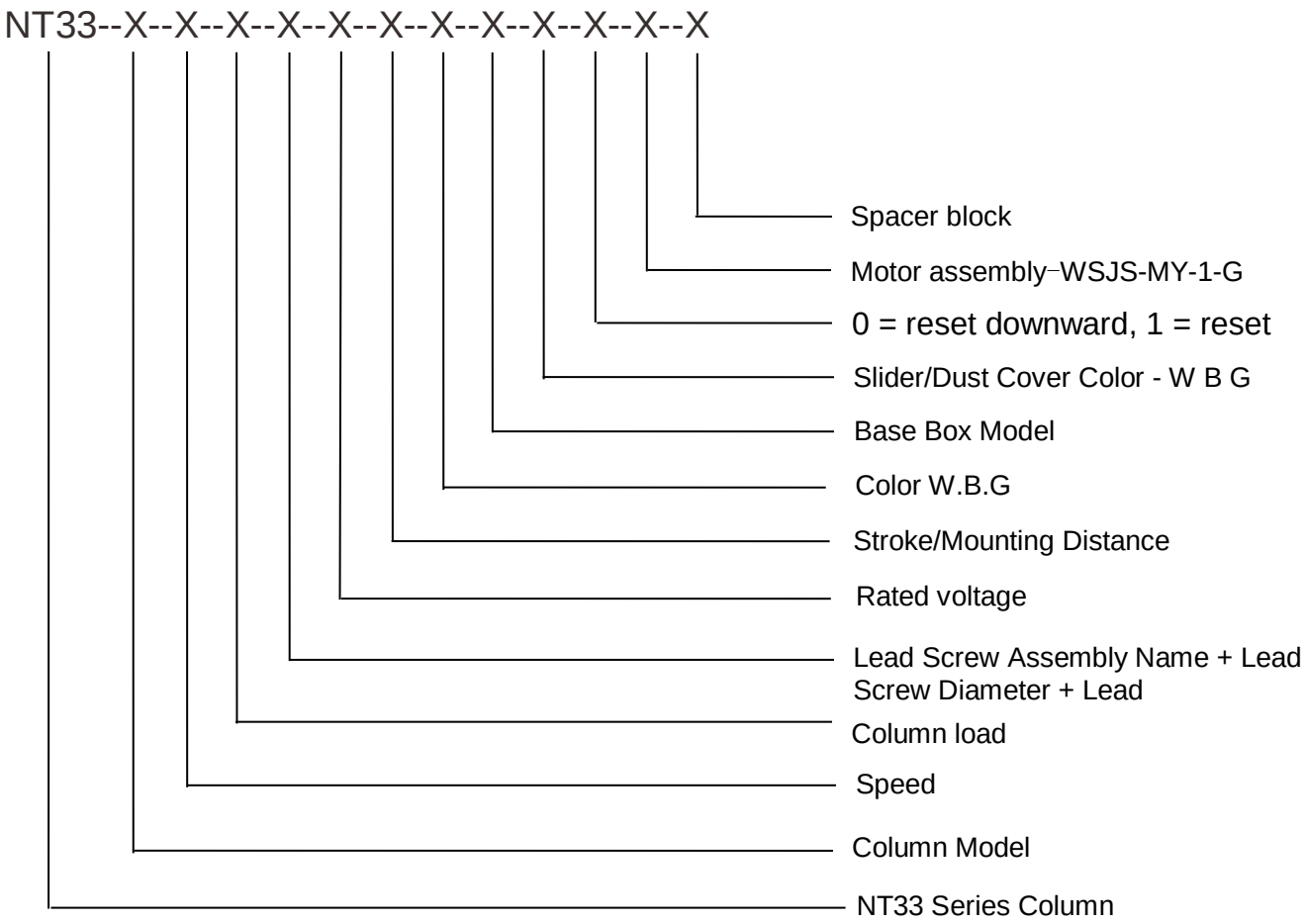

F indicates no hole, A indicates upright, and R indicates inverted.

Note that for a table, the padding blocks are used to connect the two uprights at positions A1 and A2. For a single table with added cross bracing, the padding blocks are used to connect the two uprights at position A3.

Dimensions

All measurements do not include the thickness of the powder coating.

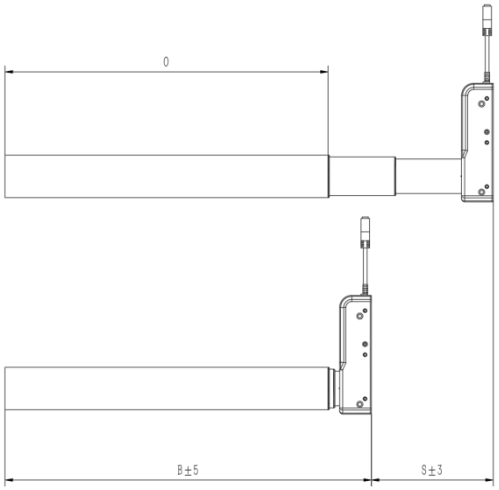

Version	Combination code	B (Installation Dimensions) [mm]	S (Itinerary) [mm]	O (outer tube length) [mm]
EU	DF3A xxxx 65 0 / 600	600	650	530

DL6D

F3A installation dimensions, stroke, and outer tube length (mm)

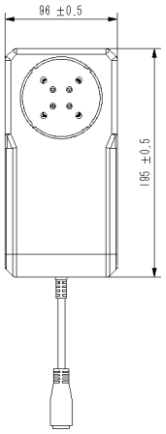

Motor housing
Outline dimensions

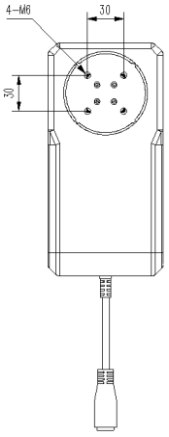

Lifting column base
mounting dimensions

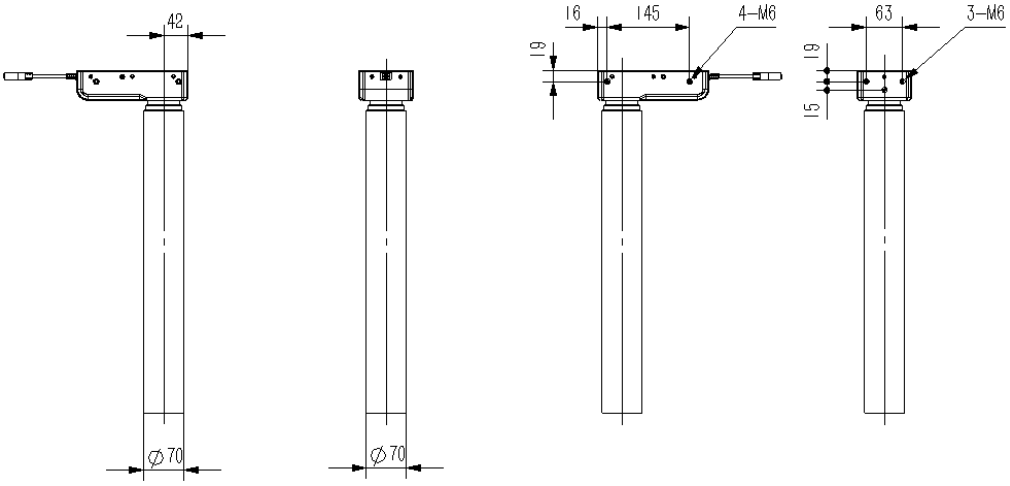

DF3A Dimensions(mm)

For installation instructions and usage guidelines, please refer to the relevant user manual.