NATE

LTE'S GET ACTIVE

NT33 ___

2SAF3(A)-KJA121

Product Specification



www.natekj.com

NATE DRIVE

Product Specification

NT33-2SAF3A-KJA121

Product Characteristics

- Desk frame lifting range ： 605-1255mm
- Frame telescoping range ： 990-1400mm
- Compatible tabletop length ： 1000-1600mm
- Foot length optional: 600mm
- Column hole-free design ，
- Load Capacity ： 80kg
- Maximum speed ： 25mm/s
- Low Noise Leve ：≤ 50dB(no-load)
- Anti-collision
- Standby ： < 0.1W
- Surface: Spray plastic
- white (standard)
- black (standard)
- gray (standard)
- Package Size ： 1050x260x185mm
- Gross Weight ： 17.2/15.7



Available options

- Support customize colors
- Match with any hand controller
- Available with many type of feet

Usage

- Work schedule: 10%, 2 minutes of work and 18 minutes of rest
- Usage environment: Indoor
- Storage and Transportation Temperature:-10℃ ~ 70℃

Dimension drawing

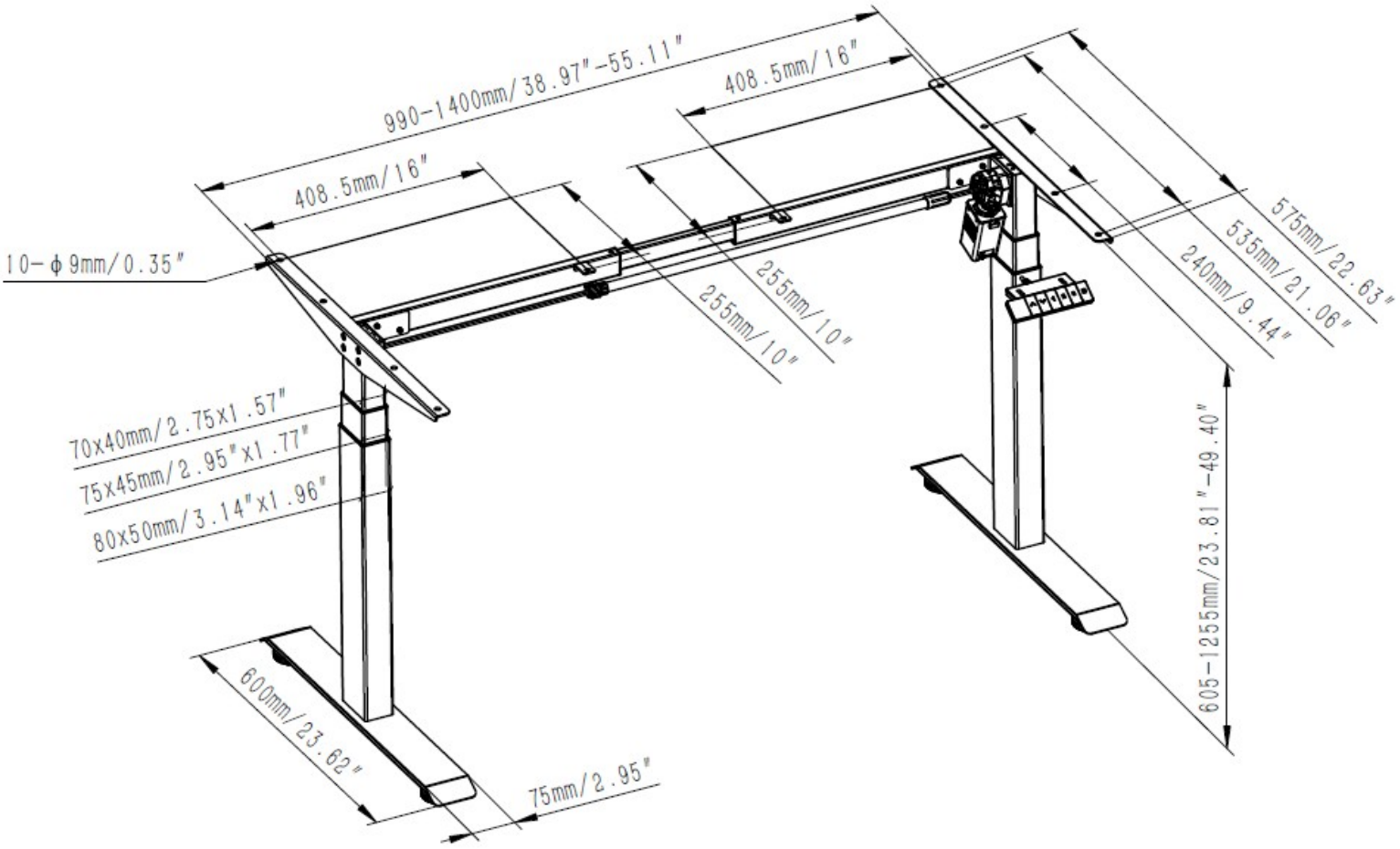

Examples of naming rules

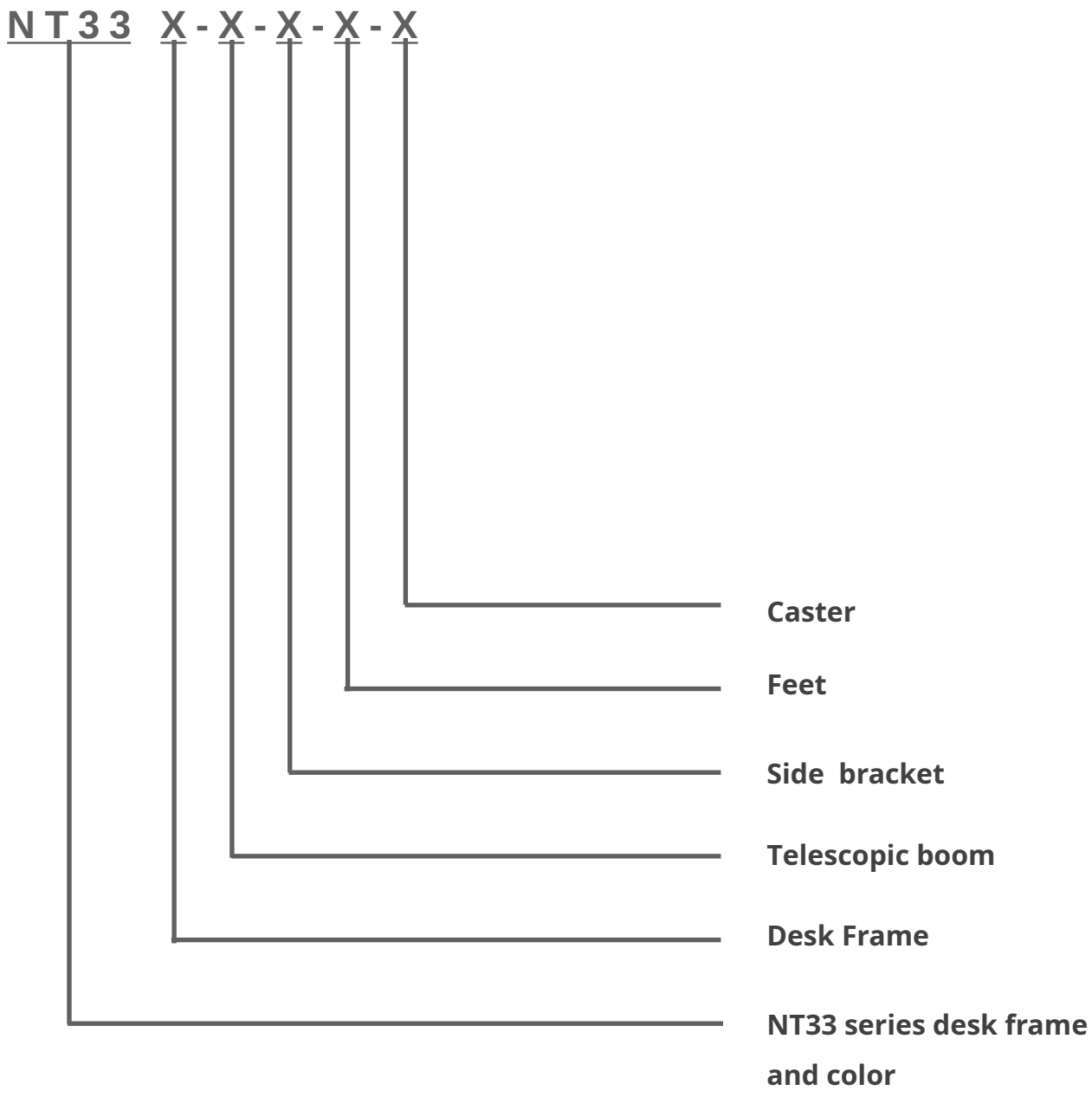

F represents no holes / A represents upwards / R represents reverse