NATE

LTE'S GET ACTIVE

NT33-HE3A-LJ64-XC35

Product Specification

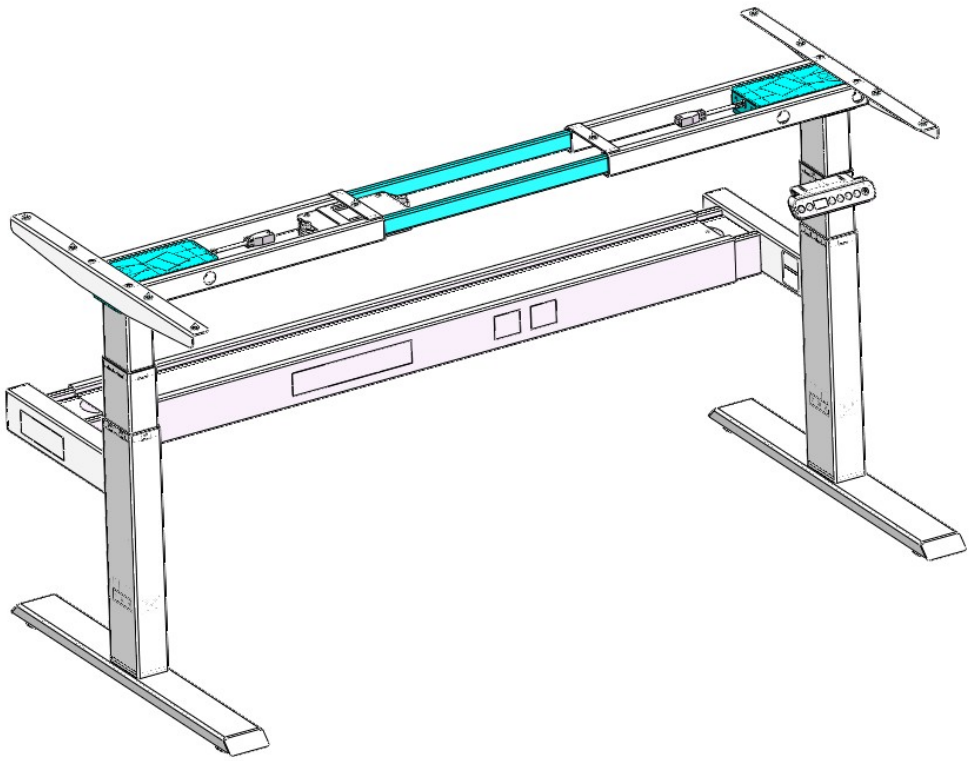

Product Specification

NT33-HF3A-LJ64-XC35

Product Characteristics

- **Height Range ： 600-1250mm**
- **Stoke ： 650mm**
- **Frame Range ： 1450-1750mm**
- **Desktop size ： 1500~1800mm × 700~800mm**
- **Optional length of footings: 600-700mm**
- **Hole-Free Column Design**
- **Load Capacity ： 120kg**
- **Max Speed ： 40mm/s**
- **Low noise level ：≤ 50dB(no-load)**
- **Anti-collision**
- **Standby consumption ： < 0.1W**
- **Surface ： Spray plastic**
- **white (standard)**
- **black (standard)**
- **grey (standard)**
- **Package Size ： 1065*270*215mm+1245*185*120mm**
- **Package weight ： 47.15KG**

Available options

- **Support customize colors**
- **Match with any hand controller**
- **Available with many type of feet**

Usage

- **Work schedule: 10%, 2 minutes of work and 18 minutes of rest**
- **Usage environment: Indoor**
- **Storage and Transportation Temperature:-10℃ ~ 70℃**

Dimension drawing

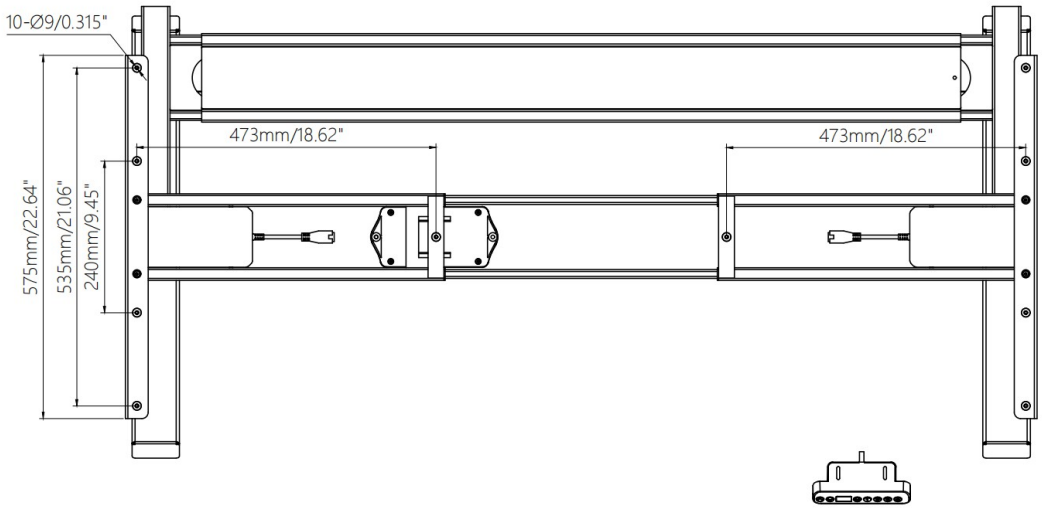

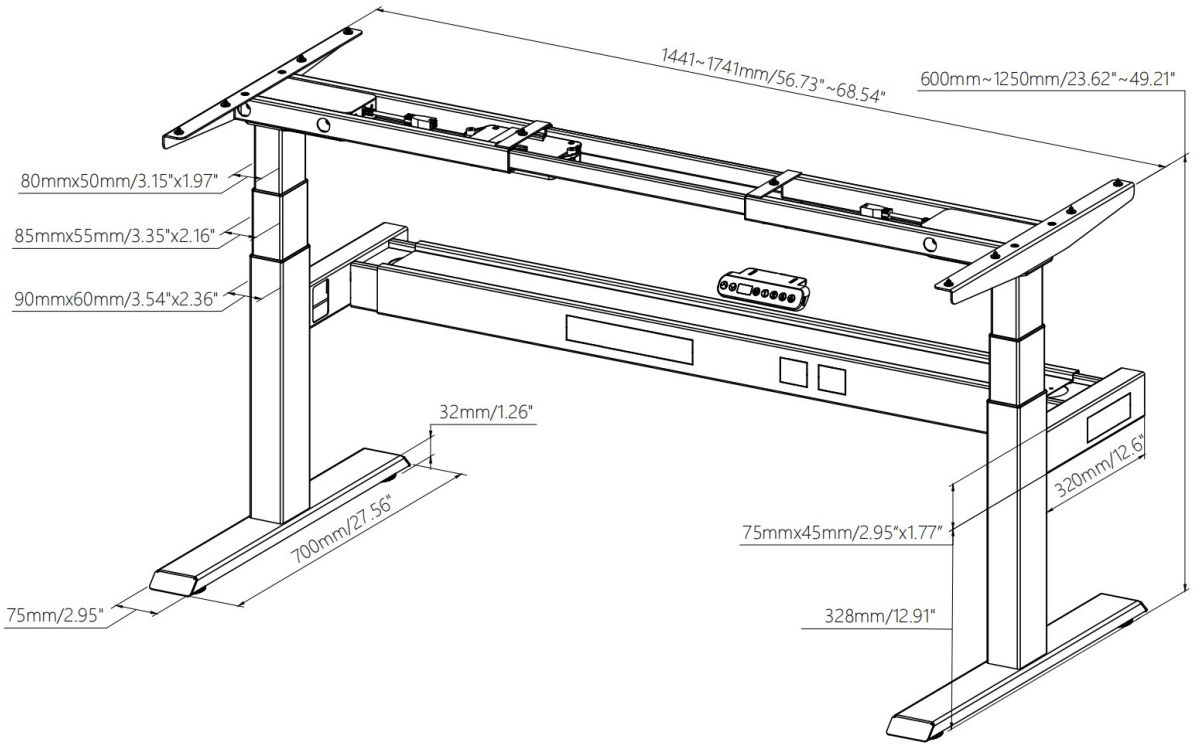

Examples of naming rules

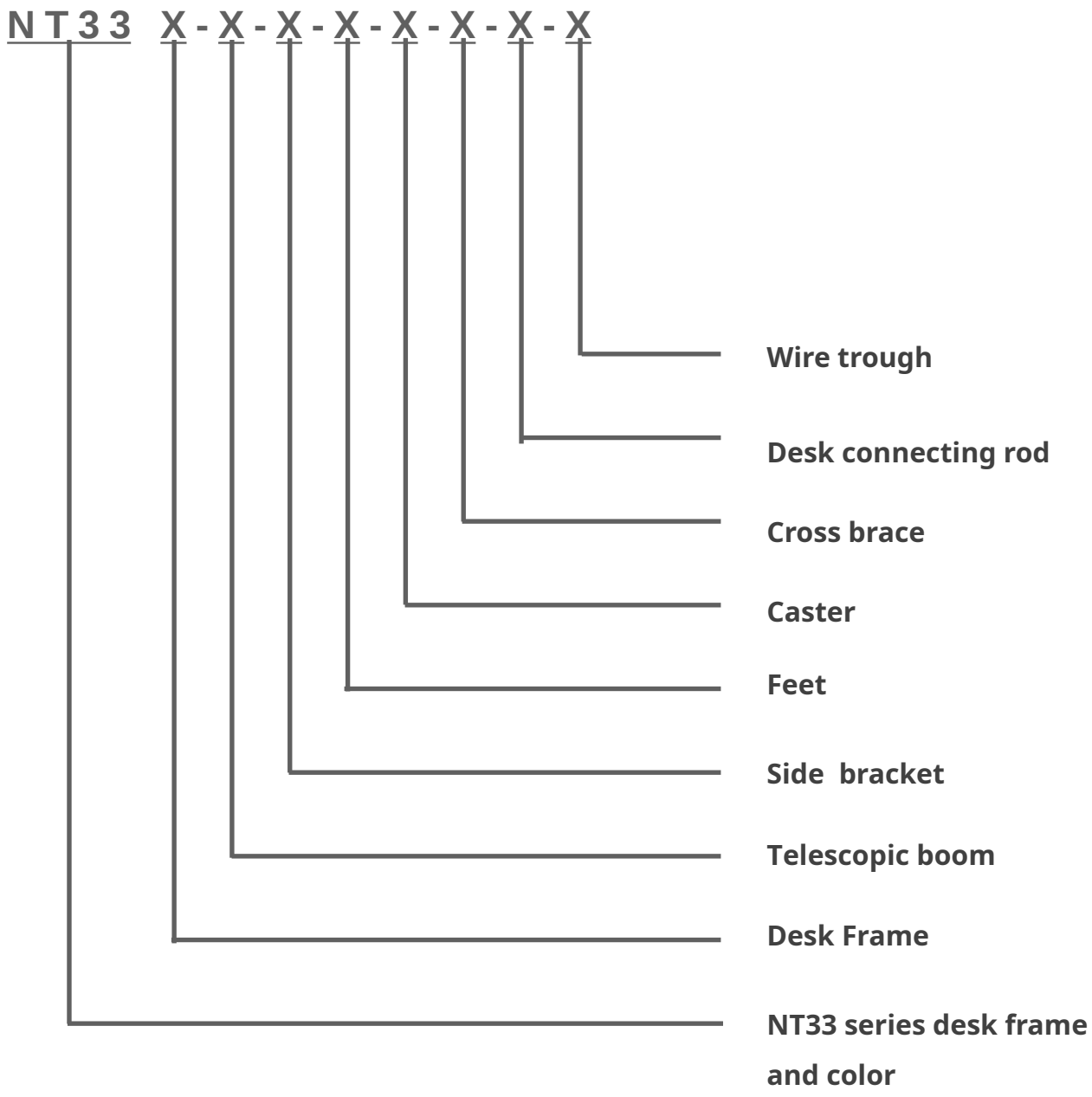

F represents no holes / R represents reverse