Assembly Instruction

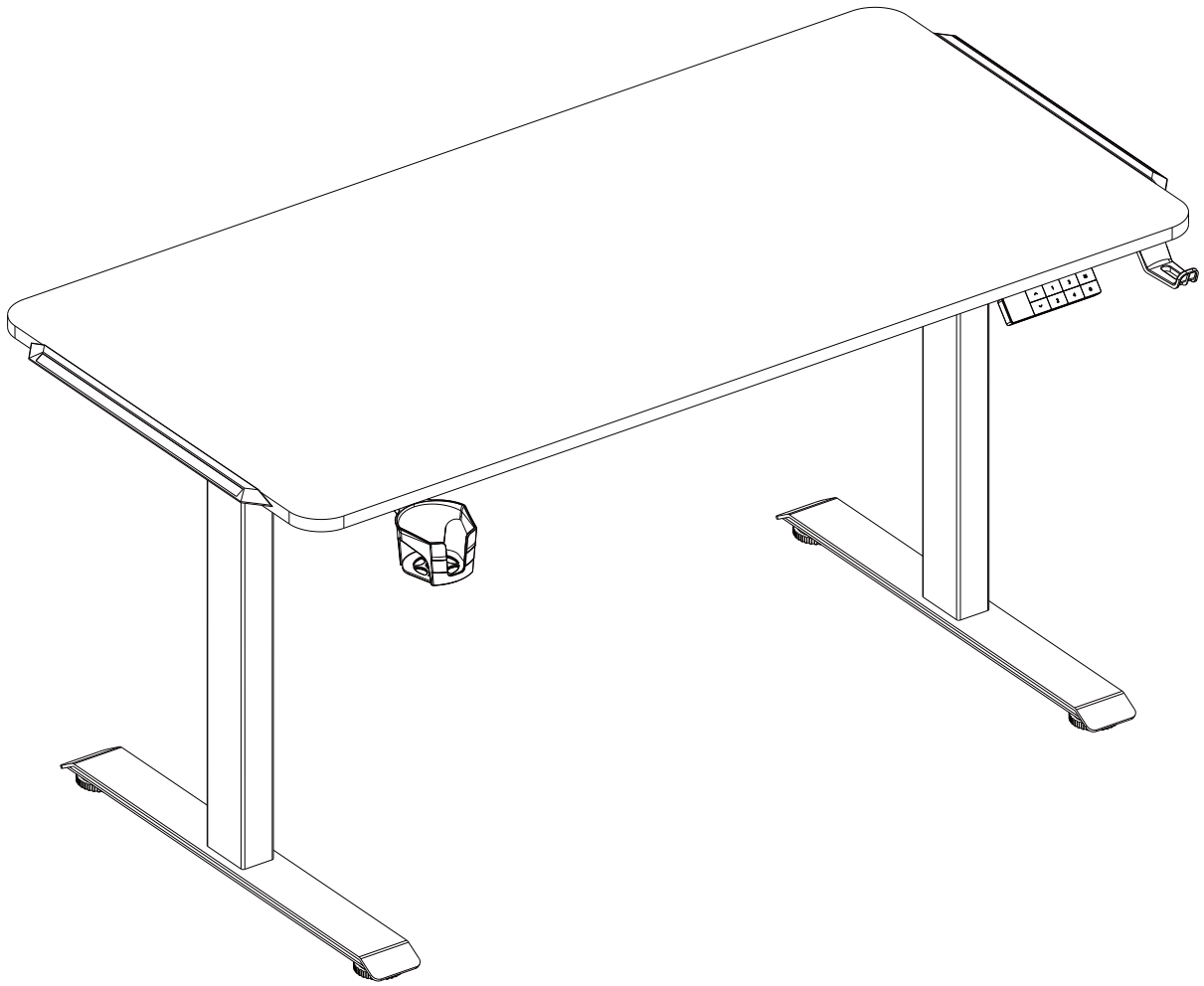

-Office Desk

-Electric lifting table

Installation tips

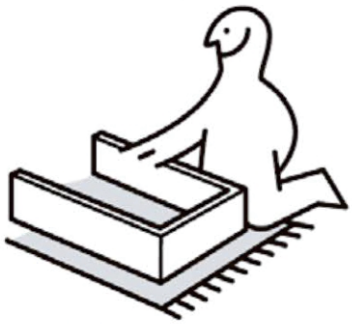

Please don't tighten the screws completely and go back later for a final tightening of all the screws after pieces are aligned with each other .

Lay a mat or old blanket out to assemble onto so the floor and the furniture doesn't get scratched or damaged during building.

Part List

①	②	③	④	⑤	⑥
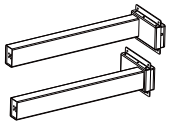	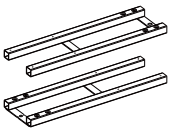	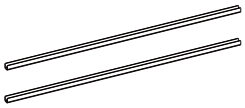	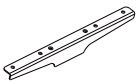	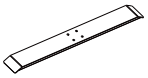	
Lift Column ∗2	Crossbar ∗2	Crossbar Center Rails ∗2	Side Bracket ∗2	Base ∗2	Leveling Studs ∗4

⑦	⑧	⑨	⑩	⑪	⑫
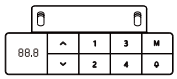	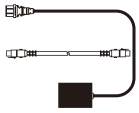		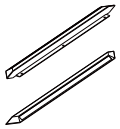		
Handset ∗1	Wires ∗2	Bottom Plate∗1	Light Strip∗2	Hanger A ∗1	Hanger B ∗1

⑬	⑭	⑮
	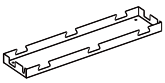	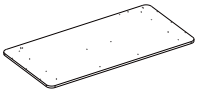
Hanger C ∗2	Cable Tray∗1	Tabletop∗1

Accessory Kit

Ⓐ	Ⓑ	Ⓒ	Ⓓ	Ⓔ	Ⓕ	Ⓖ	Ⓗ	Ⓘ	Ⓙ
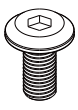	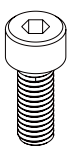		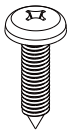	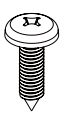					
Qty ∗8 M6×10 Screws	Qty ∗8 M6×16 Screws	Qty ∗6 M6×8 Screws	Qty ∗18 M5×16 Screws	Qty∗2 M4×16 Screws	Qty ∗8 M8×20 Screws	Qty ∗4 M4×5 Screws	Qty ∗5 Cable Clips	3mm Allen Wrench	4mm Allen Wrench

STEP 1:

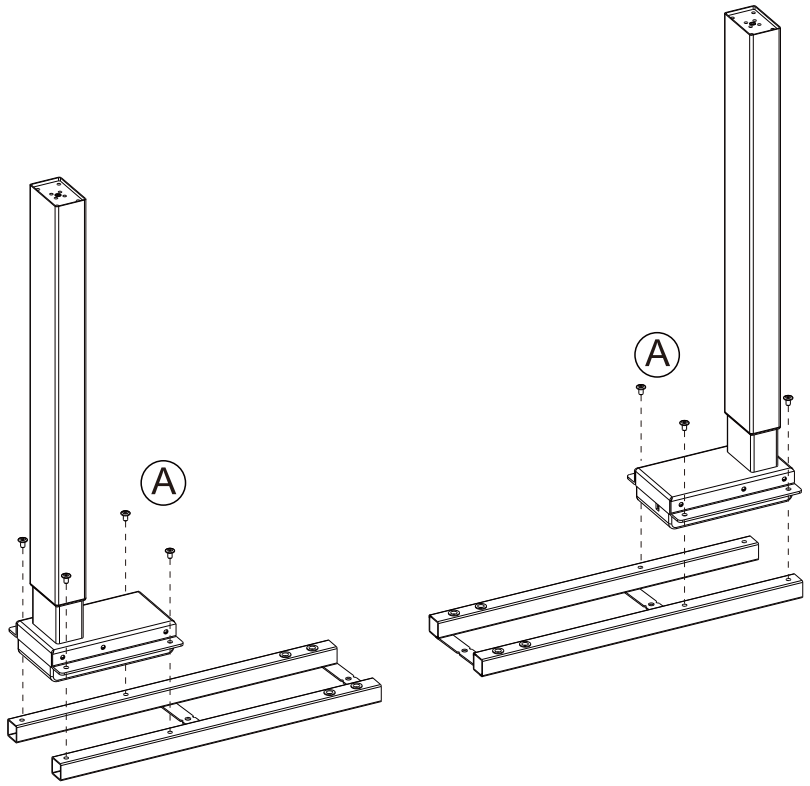

① Lift Column ＊2
② Crossbar ＊2
Ⓐ M6×10 Screws ＊8

STEP 2:

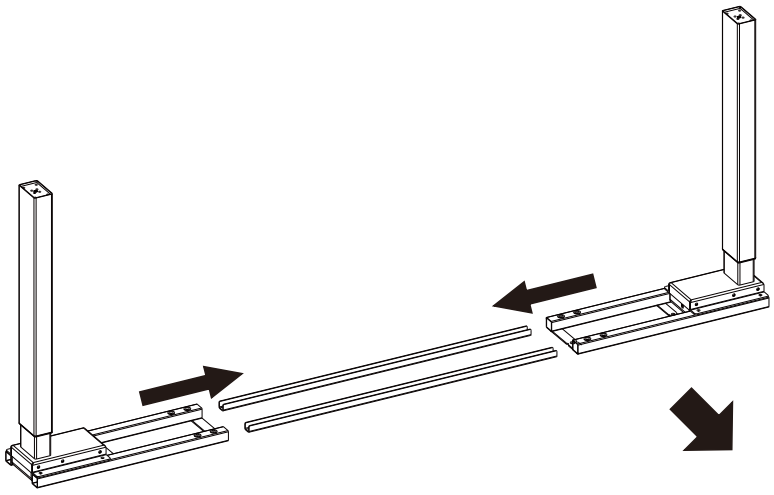

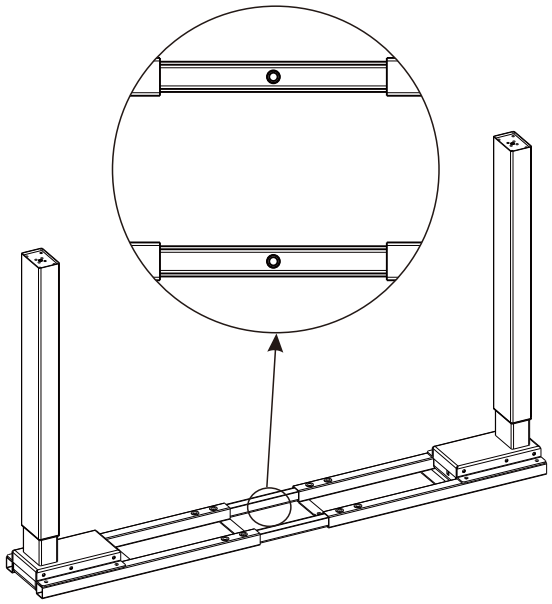

③ Crossbar Center Rails ＊2

Please keep the hole on Crossbar Center Rails in the middle.

STEP 3:

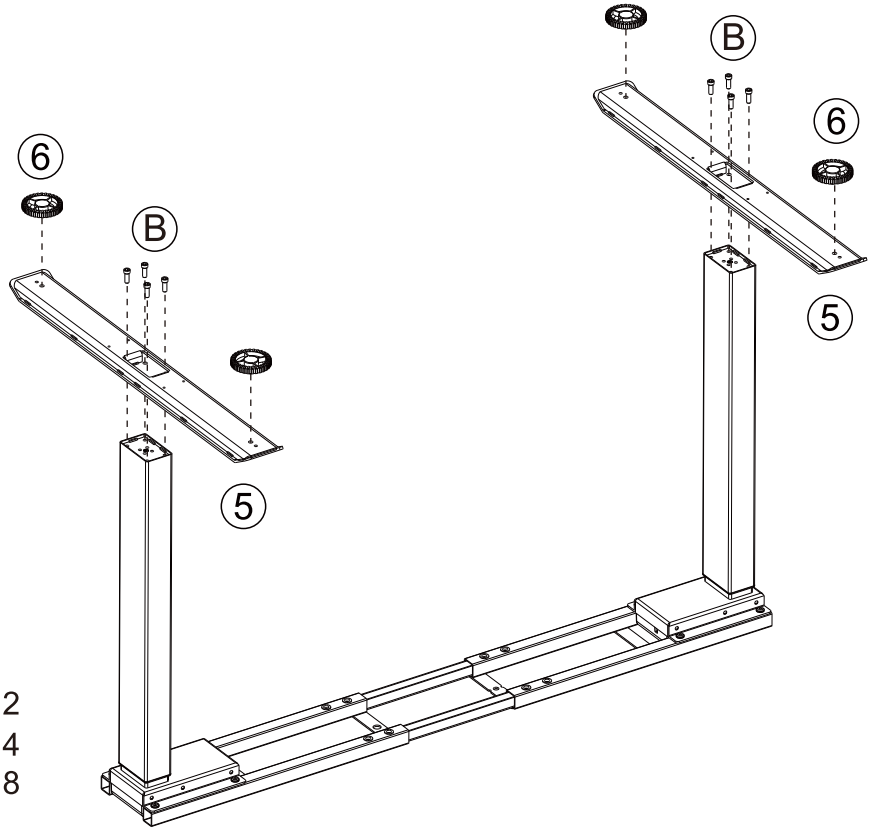

⑤ Base ＊2
⑥ Leveling Studs ＊4
Ⓑ M6×16 Screws ＊8

STEP 4:

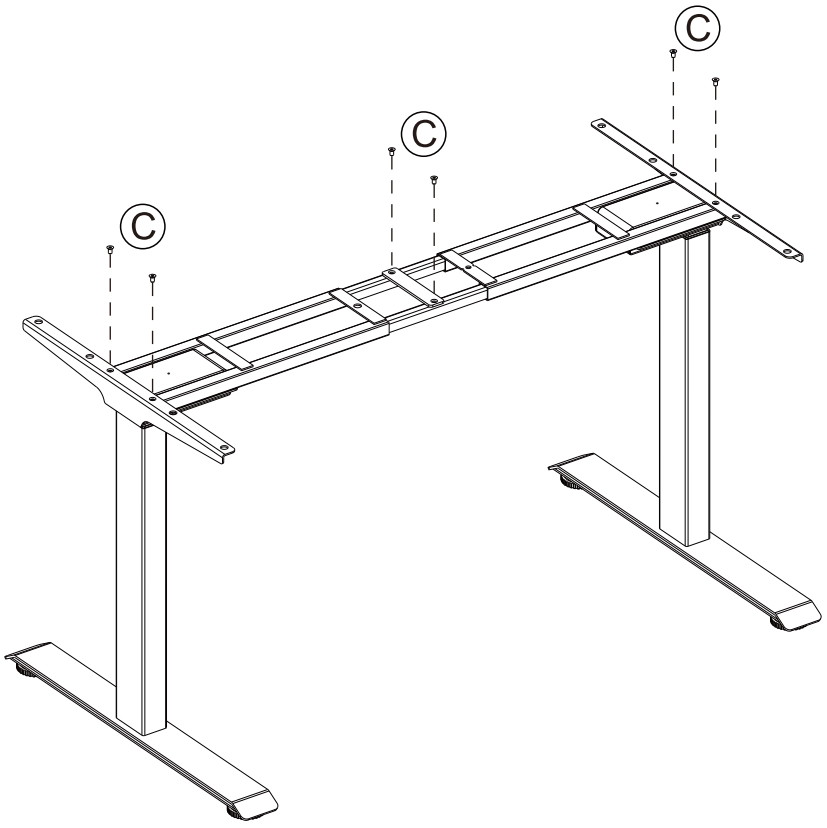

④ Side Bracket ＊ 2
⑨ Bottom Plate ＊ 1
Ⓒ M6×8 Screws ＊ 6

STEP 5:

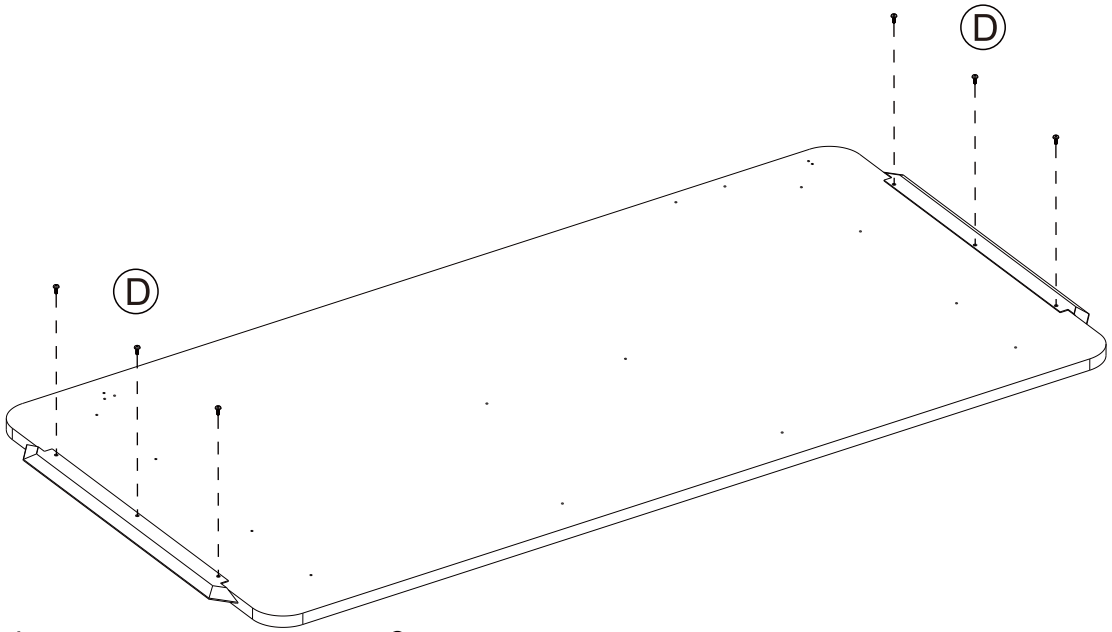

⑩	Light Strip	* 2
⑮	Tabletop	* 1
Ⓓ	M5×16 Screws	* 6

STEP 6:

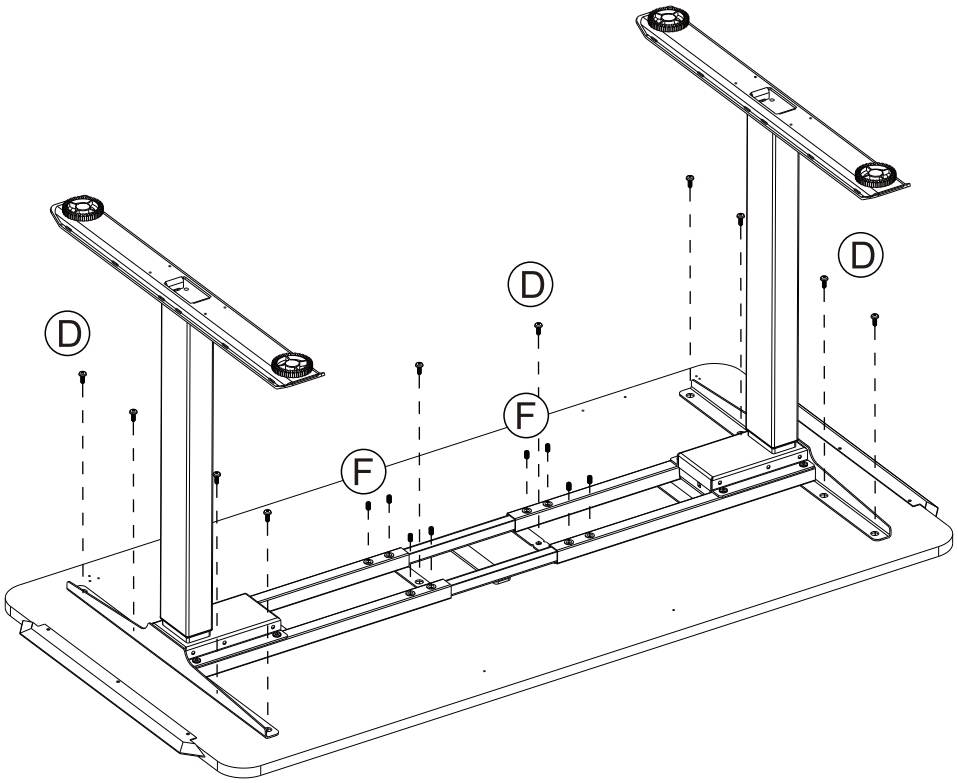

Ⓓ	M5×16 Screws	* 10
Ⓕ	M8×20 Screws	* 8

STEP 7:

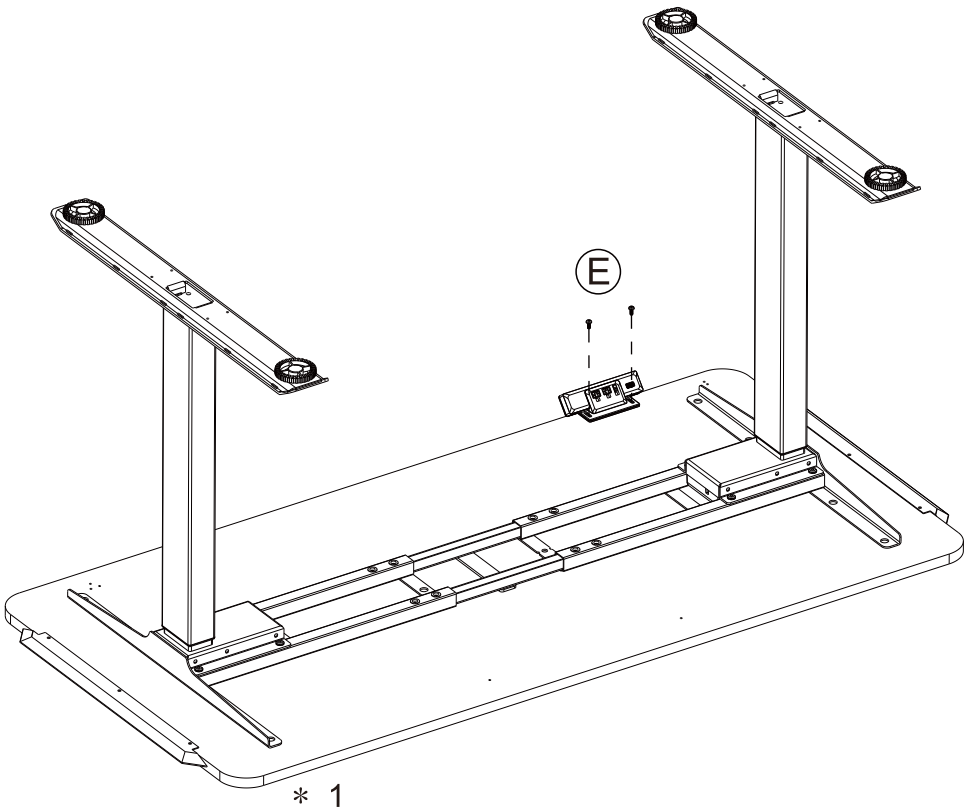

⑦ Handset ＊ 1
Ⓔ M4×16 Screws ＊ 2

STEP 8:

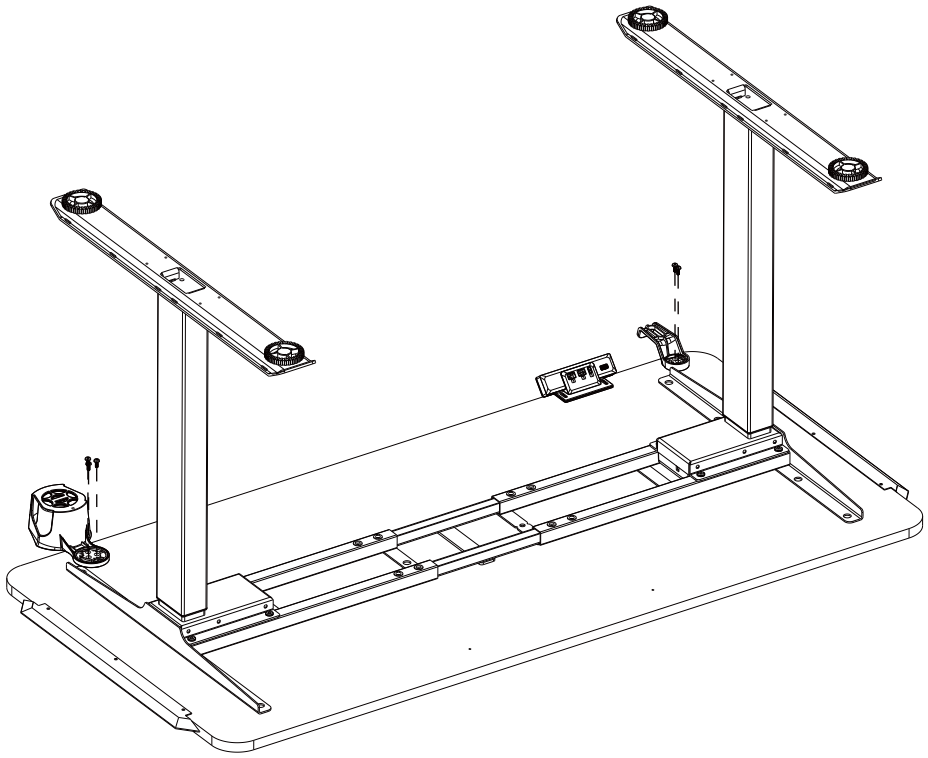

⑪ Hanger A ＊ 1
⑫ Hanger B ＊ 1

STEP 9:

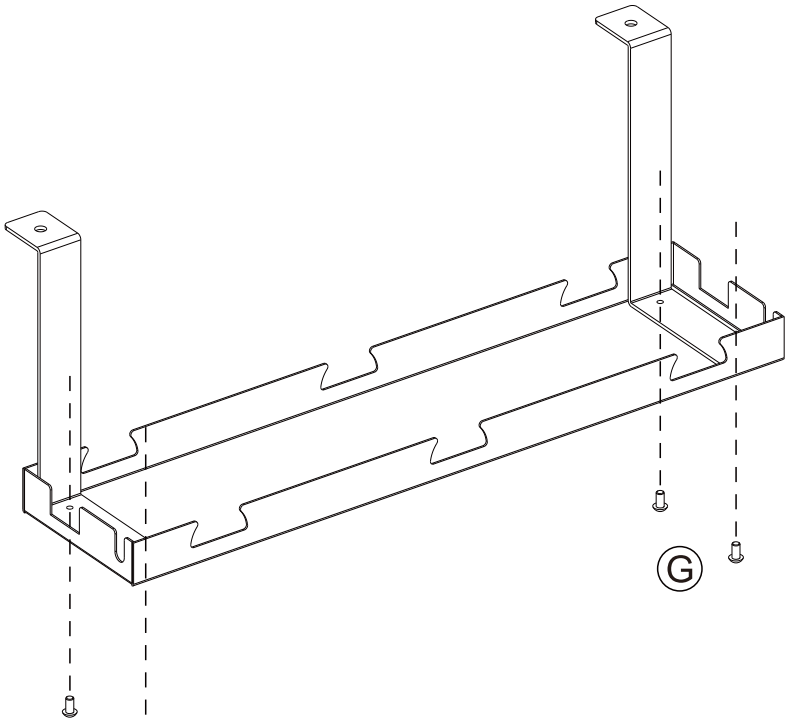

⑬ Hanger C ＊ 2
⑭ Cable Tray ＊ 1
Ⓖ M4×5 Screws ＊ 4

STEP 10:

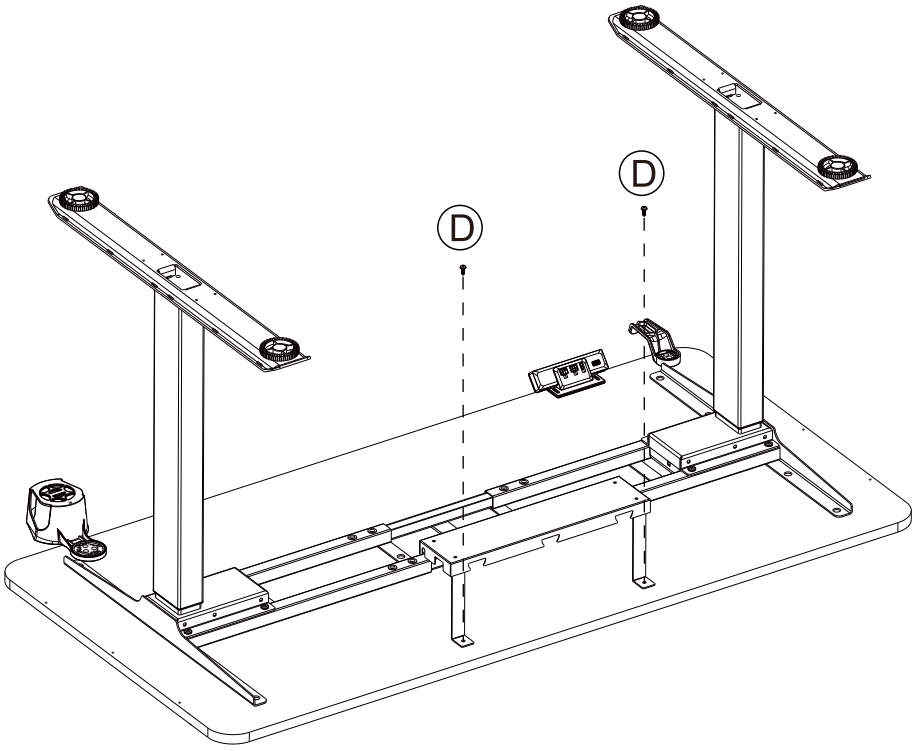

Ⓓ M5×16 Screws ＊ 2

STEP 11:

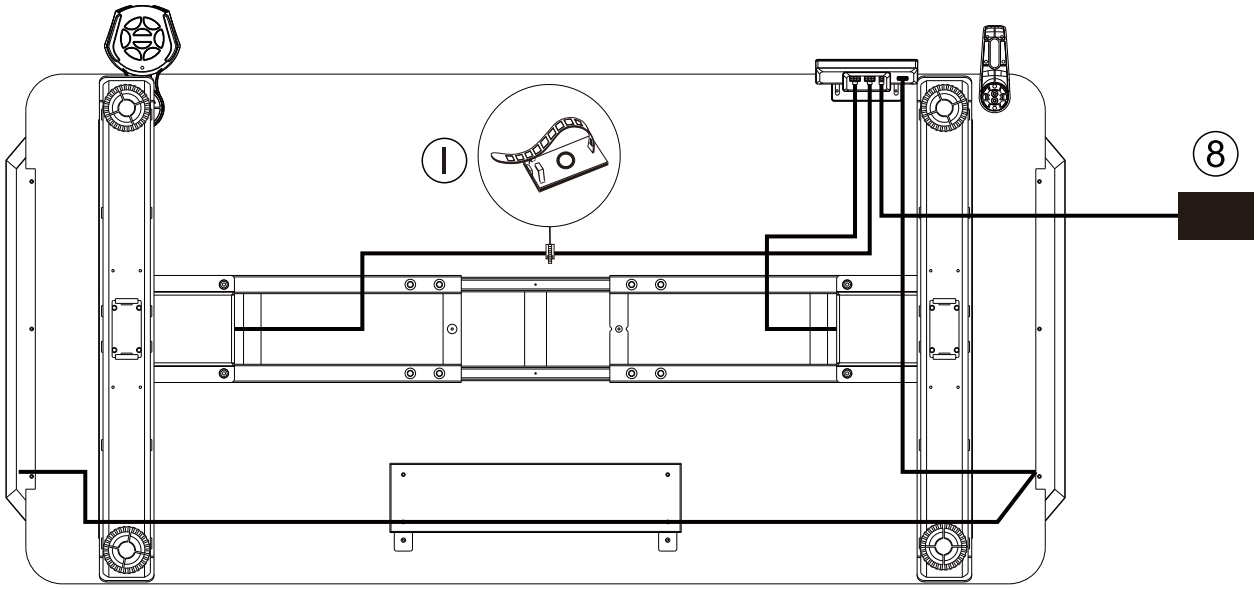

⑧ Wires ＊ 2
Ⓘ Cable Clips ＊ 5

Ready To Use

Before Plugging the table into the outlet, make sure that
- The lift columns are level and set at the lowest position.
- All the screws are tightened,to avoid the desk making noise and wobbling.

Activate the desk by following the next steps.
-Please press button down and hold for 10-15 seconds until it stutters and beeps.
-Release the button, then your desk is ready to use.

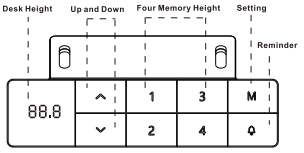

Operation Guide

1. Memory desired height
-Press button “M”,display show “S-” with flash.
-Press number and set desired position.

2. Advanced Safety feature- lock and unlock the table.
-Press button up and down at same time for 5 seconds, display “LOC”
-All single button will be inactive and table will be unable to move.
-Pressing button up and down together willunlock the keypad and release the LOC

3. Reset the table
When display show Error code orRSt, Please reset the table.
Do the reset:
- Press the DOWN button and hold it for 10 to 15 seconds until the table moves down and up slightly.

4.Overload Hot
- When the display shows HOT, unplug the power cord from the control box. Unplug the cable that links the keypad to the control box. Wait 3 minutes and plug all the cables in again.

5. How to set sedentary reminder functions
-Press "Clock" buttons, and then press "UP" and "DOWN" buttons to adjust sedentary reminder hours. When screen display small dot which means succeed.

Reason: Overload from constantly operating the table .
Allow the controller to cool down for a few minutes before continuing work.

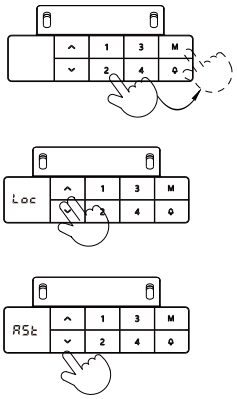

Press by holding
10-15 seconds